D 101.11:5-4120-335-24P

TM 5-4120-335-24

RETURN TO GOV. DOCS. CLERK

TECHNICAL MANUAL

ORGANIZATIONAL, DIRECT AND GENERAL SUPPORT MAINTENANCE REPAIR PARTS AND SPECIAL TOOLS LIST

AIR CONDITIONER: WALL OR BASE MOUNTED: AIR COOLED, SELF CONTAINED, ELECTRIC MOTOR DRIVEN, 6,000 BTU/HR, 115V 1 PHASE, 2 WIRE, 50/60 HERTZ (THERM-AIR MODEL CE-6A-60A2)

FSN 4120-476-9249

HEADQUARTERS, DEPARTMENT OF THE ARM

AUGUST 197

Technical Manual
No. 5-4120-335-24P

HEADQUARTERS,
DEPARTMENT OF THE ARMY
Washington, D.C., *14 August 1972*

ORGANIZATIONAL, DIRECT AND GENERAL SUPPORT MAINTENANCE REPAIR PARTS AND SPECIAL TOOLS LIST

AIR CONDITIONER: WALL OR BASE MOUNTED, AIR COOLED, SELF CONTAINED, ELECTRIC MOTOR DRIVEN 6,000 BTU/HR, 115 VOLT, 1 PHASE, 2 WIRE 50/60 HERTZ (THERM-AIR MODEL CE-6A-60A2) FSN 4120-476-9249

Current as of 24 July 1972

		Listing Page	Illust. Fig.
Section I.	INTRODUCTION	iii	
II.	PRESCRIBED LOAD ALLOWANCE - Not applicable		
III.	REPAIR PARTS FOR ORGANIZATIONAL MAINTENANCE	1	
Group 01.	Electrical Cable and Interconnecting hoses	1	
	Electrical cable and interconnecting hoses		1
02.	Cover and Panels, Evaporator Section - 2		
	Mounting bracket connector cover, rear, left and bottom panels		2
	Mounting bracket, top left and front panels		3
03.	Control Box and Related Parts	4	
	Control box and related parts		4
04.	Evaporator Fan Motor and Related Parts	6	
	Evaporator fan, fan motor and mounting bracket		5
	Front and rear dampers, evaporator section		6
	Fan guard and related parts		7
05.	Wiring Harness, Evaporator Section -	9	
	Wiring harness, evaporator section		8
06.	Expansion Valve and Tubing	9	
	Expansion valve and tubing		9
07.	Evaporator, Heater Coils, and Air Filter	9	
	Evaporator and heater coils and air filter		10
08.	Condensate Pan and Frame, Evaporator Section	10	
	Condensate pan and frame, evaporator section		11
09.	Cover and Panels, Condenser Section	11	
	Mounting bracket, connector cover, front, top and left side panels, condenser section		12
	Mounting bracket, left rear and bottom panels, condenser section		13
10.	Wiring Harness, Condenser Section	13	
	Wiring harness, condenser section		14
11.	Condenser Fan, Fan Motor, Pressure Switch, Fuse and Rectifier	13	
	Condenser fan, fan motor, pressure switch and rectifier		15
12.	Refrigeration Components	15	
	Shut-off valve and piping		16

		Listing Page	Illust. Fig.
	Compressor, sight glass, filter-drier, receiver and piping		17
13.	Capacitors, Fan Shroud, Condenser Coil and Frame	16	
	Capacitors, fan shroud, condenser coil and frame		18
Section IV.	SPECIAL TOOLS, TEST AND SUPPORT EQUIPMENT FOR ORGANIZATIONAL MAINTENANCE - Not applicable		
V.	REPAIR PARTS FOR DS AND GS MAINTENANCE	19	
Group 01.	Electrical Cable and Interconnecting Hoses	19	
	Electrical cable and interconnecting hoses		1
02.	Cover and Panels, Evaporator Section	20	
	Mounting bracket, connector cover, rear, left and bottom panels		2
	Mounting bracket, top left and front panels		3
03.	Control Box and Related Parts	22	
	Control box and related parts		4
04.	Evaporator Fan Motor and Related Parts	24	
	Evaporator fan, fan motor and mounting bracket		5
	Front and rear dampers, evaporator section		6
	Fan guard and related parts		7
05.	Wiring Harness, Evaporator Section	27	
	Wiring harness, evaporator section		8
06.	Expansion Valve and Tubing	27	
	Expansion valve and tubing		9
07.	Evaporator and Heater Coils and Air Filter	29	
	Evaporator and heater coils and air filter		10
08.	Condensate Pan and Frame, Evaporator Section	30	
	Condensate pan and frame, evaporator section		11
09.	Cover and Panels, Condenser Section	30	
	Mounting bracket, connector cover, front, top and left side panels, condenser section		12
	Mounting bracket, left, rear and bottom panels, condenser section		13
10.	Wiring Harness, Condenser Section	32	
	Wiring harness, condenser section		14
11.	Condenser fan, fan motor, pressure switch, fuse and rectifier	33	
	Condenser fan, fan motor, pressure switch and rectifier		15
12.	Refrigeration components	35	
	Shut-off valve and piping		16
	Compressor, sight glass, filter-drier, receiver and piping		17
13.	Capacitors, fan shroud, condenser coil and frame	38	
	Capacitors, fan shroud, condenser coil and frame		18
Section VI.	SPECIAL TOOLS, TEST AND SUPPORT EQUIPMENT FOR DS, AND GS MAINTENANCE - Not applicable		
VII.	FEDERAL STOCK NUMBER AND REFERENCE NUMBER INDEX	59	

SECTION I.
INTRODUCTION

1. Scope

a. This manual lists repair parts, special tools, test and support equipment required for the performance of organizational, direct support, and general support maintenance of the air conditioner.

b. Repair parts listed represent those authorized for use at indicated maintenance levels and will be requisitioned (on an "as required" basis until stockage is justified by demand in accordance with AR 735-35 or AR 710-2).

2. General

This Repair Parts and Special Tools List is divided into the following sections:

a. Repair Parts - Section III. A list, in figure and item number sequence, of repair parts authorized at the organizational level for the performance of maintenance, including those items which must be removed for replacement of the authorized item. Items are listed by assembly group in top down breakdown sequence.

b. Special Tools, Test and Support Equipment - Section IV. Not applicable.

c. Repair Parts - Section V. A list, in figure and item number sequence, of the repair parts authorized for the performance of maintenance at the direct support and general support levels, including those items which must be removed for replacement of the authorized item. Items are listed by assembly group in top down breakdown sequence.

d. Special Tools, Test and Support Equipment - Section VI. Not applicable.

e. Federal Stock Number and Reference Number Index - Section VII. A list of Federal Stock Numbers in ascending numerical sequence, followed by a list of reference numbers appearing in all listings, in ascending alpha-numeric sequence, cross-referenced to the illustration figure and item number.

3. Explanation of Columns

The following provides an explanation of columns in the tabular lists in sections III through V.

a. Source, Maintenance, and Recoverability Codes (SMR).

(1) *Source code.* Indicates the source for the listed items. Source codes are:

Code	Explanation
P	Repair Parts, Special Tools and Test Equipment supplied from the GSA/DSA, or Army supply system, and authorized for use at indicated maintenance levels.
P2	Repair Parts, Special Tools and Test Equipment which are procured for insurance purposes because the combat or military essentiality of the end item dictates that a minimum quantity be available in the supply system.
M	Repair Parts, Special Tools and Test Equipment which are not procured or stocked, as such in the supply system but are to be manufactured at indicated maintenance levels.
A	Assemblies which are not procured or stocked, as such, but are made up of two or more units. Such component units carry individual stock numbers and descriptions, are procured and stocked separately and can be assembled to form the required assembly at indicated maintenance categories.
X	Parts and assemblies that are not procured or stocked because the failure rate is normally below that of the applicable end item or component. The failure of such part or assembly should result in retirement of the end item from the supply system.
X1	Repair Parts which are not procured or stocked. The requirement for such items will be filled by the next higher assembly or component.
X2	Repair Parts, Special Tools and Test Equipment which are not stocked and have no foreseen mortality. The indicated maintenance level requiring such repair parts will attempt to obtain the parts through cannibalization or salvage, the item may be requisitioned with exception data, from the end item manager, for immediate use.
G	Major assemblies that are procured with PEMA funds for initial issue only as exchange assemblies at DSU and GSU level. These assemblies will not be stocked above the DS and GS level or returned to depot supply level.

NOTE

Cannibalization or salvage may be used as a source of supply for any items source coded above except those coded X1 and aircraft support items as restricted by AR 700-42.

(2) *Maintenance code.* Indicates the lowest level of maintenance authorized to install the listed item. Repair parts and special tools assigned Maintenance Code

"C" may be stocked at the operator level of maintenance when authorized by the Unit Commander. The maintenance level codes are:

Code	Explanation
C	Crew or Operator maintenance
O	Organizational maintenance
F	Direct Support maintenance
H	General Support maintenance

(3) *Recoverability code.* Indicates whether unserviceable items should be returned for recovery or salvage. Items not coded are expendable. Recoverability codes are:

Code	Explanation
R	Applied to repair parts (assemblies and components), special tools and test equipment which are considered economically reparable at direct and general support maintenance levels. When the item is no longer economically reparable, it is normally disposed of at the GS level. When supply considerations dictate, some of these repair parts may be listed for automatic return to supply for depot level repair as set forth in AR 710-50. When so listed, they will be replaced by supply on an exchange basis.
S	Repair parts, special tools, and test equipment and assemblies which are economically reparable at DSU and GSU activities and which normally are furnished by supply on an exchange basis. When items are determined by a GSU to be uneconomically reparable, they will be evacuated to a depot for evaluation and analysis before final disposition.
T	Higher dollar value recoverable repair parts, special tools and test equipment which are subject to special handling and are issued on an exchange basis. Such items will be evacuated to the depot for overhaul or final disposition. Communication-Electronics and Missile Support items will be repaired/overhauled only at depots.
U	Repair parts, special tools and test equipment specifically selected for salvage by reclamation units because of their precious metal content, critical materials, high dollar value or reusable casings or castings.

b. Federal Stock Number. Indicates the Federal stock number assigned to the item and will be used for requisitioning purposes.

c. Description. Indicates the Federal item name and any additional description of the item required. Assembly components and subassemblies are indented under major assemblies. The abbreviation "w/e" when used as part of the nomenclature, indicates the Federal stock number, includes all armament, equipment, accessories, and repair parts issued with the item. A part number or other reference number is followed by the applicable five-digit Federal supply code for manufacturers in parenthesis. Repair parts quantities included in kits and sets are shown in front of the repair part name. Material required for manufacture or fabrication is identified.

d. Unit of Measure (U/M). A two-character alphabetic abbreviation indicating the amount or quantity of the item, as used, upon which the allowances are based, e.g., ft., ea., pr., etc.

e. Quantity Incorporated in Unit. Indicates the quantity of the item used in the assembly group. A "V" appearing in this column in lieu of a quantity indicates that a definite quantity cannot be indicated, (e.g., shims, spacers, etc.).

f. 15-Day Organizational Maintenance.

(1) Items authorized for use as required but not for initial stockage are identified with an asterisk in the allowance column.

(2) The allowance columns are divided into four subcolumns. Indicated in each subcolumn is the total quantity of special tools authorized for the number of equipments supported.

g. 30-Day DS/GS Maintenance Allowance.

(1) Items authorized for use as required but not for initial stockage are identified with an asterisk in the allowance column.

(2) The allowance columns are divided into three subcolumns. The quantitative allowance of special tools for DS/GS levels of maintenance will represent initial stockage for a 30-day period for the number of equipments supported.

h. Items Authorized.

(1) Items authorized for use as required but not for initial stockage are identified with an asterisk in the allowance column.

(2) This column indicates the total quantity of special tools required for distribution and contingency planning purposes.

i. Depot Maintenance Allowance Per 100 Equipment.

(1) Items authorized for use as required but not for initial stockage are iden-

by the user is encouraged. Reports should be submitted on DA Form 2028 (Recommended Changes to Publications) and forwarded direct to Commanding General, U. S. Army Mobility Equipment Command, ATTN: AMSME-MPP, 4300 Goodfellow Boulevard, St. Louis, Missouri 63120.

by the user is encouraged. Reports should be submitted on DA Form 2028 (Recommended Changes to Publications) and forwarded direct to Commanding General, U. S. Army Mobility Equipment Command, ATTN: AMSME-MPP, 4300 Goodfellow Boulevard, St. Louis, Missouri 63120.

(1) SMR CODE	(2) FEDERAL STOCK NUMBER	(3) DESCRIPTION REF NUMBER & MFR CODE	USABLE ON CODE	(4) UNIT OF MEAS	(5) QTY INC IN UNIT	(6) 15-DAY ORGANIZATIONAL MAINTENANCE ALW (a) 1-5	(b) 6-20	(c) 21-50	(d) 51-100	(7) ILLUSTRATION (a) FIG. NO.	(b) ITEM NO.
		SECTION III - REPAIR PARTS FOR ORGANIZATIONAL MAINTENANCE									
		GROUP 01 - ELECTRICAL CABLE AND INTERCONNECTING HOSES									
MO	4130-842-5336	ASSEMBLY, CABLE, ELECTRICAL, INTERCONNECTING 13211E4608-2 (06534) MANUFACTURE FROM:		EA	1					1	9
		WIRE, ELECTRICAL, 60 ft required MIL-W-5086/1 (81349)									
		INSULATION, ELECTRICAL, 5 ft required MIL-I-631 (81349)									
		CONNECTOR, PLUG, ELECTRICAL, FEMALE, 1 ea FSN 5935-826-2174									
		CONNECTOR, PLUG, ELECTRICAL, MALE, 1 ea FSN 5935-817-3171									
PO		CONNECTOR, PLUG, ELECTRICAL MS3106R-18-4S (96906)		EA	1	*	*	*	*	1	10
P2O	4730-613-9864	CAP, DUST 5400-S6-8 (00624)		EA	1	*	*	*	*	1	11
P2O	4730-613-9864	CAP, DUST 5400-S6-8 (00624)		EA	1	*	*	*	*	1	12
P2O	4730-613-9864	CAP, DUST 5400-S6-8 (00624)		EA	1	*	*	*	*	1	13
P2O	4730-613-9864	CAP, DUST 5400-S6-8 (00624)		EA	1	*	*	*	*	1	14
PO		RIVET, SOLID: CAP MTG MS20470AD4-5 (96906)		EA	1	*	*	*	*	1	15
P2O		CAP, ELECTRICAL CONNECTOR, RECEPTACLE, DUST WITH CHAIN MS25043-22 (96906)		EA	1	*	*	*	*	1	16
PO		RIVET, SOLID: CAP MTG MS20470AD4-5 (96906)		EA	1	*	*	*	*	1	17
P2O		CAP, ELECTRICAL CONNECTOR, RECEPTACLE, DUST WITH CHAIN MS25043-18 (96906)		EA	1	*	*	*	*	1	18
PO		RIVET, SOLID: CAP MTG MS20470AD4-5 (96906)		EA	1	*	*	*	*	1	19
P2O		CAP, ELECTRICAL CONNECTOR, RECEPTACLE, DUST WITH CHAIN MS25043-22 (96906)		EA	1	*	*	*	*	1	20
PO		SCREW, MACHINE, PAN HEAD: CHAIN MTG MS35206-227 (96906)		EA	1	*	*	*	*	1	21
PO		NUT, SELF-LOCKING, HEXAGON: CHAIN MTG MS21045-06 (96906)		EA	1	*	*	*	*	1	22
P2O		CAP, ELECTRICAL CONNECTOR, RECEPTACLE DUST WITH CHAIN MS25043-12C (96906)		EA	1	*	*	*	*	1	23
PO		CONNECTOR, PLUG, ELECTRICAL MS3106A-145-7P (96906)		EA	1	*	*	*	*	1	24
P2O		WIRE ELECTRICAL MS25190-A-16 (96906)		EA	1	*	*	*	*	1	25

(1) SMR CODE	(2) FEDERAL STOCK NUMBER	(3) DESCRIPTION REF NUMBER & MFR CODE	USABLE ON CODE	(4) UNIT OF MEAS	(5) QTY INC IN UNIT	(6) 15-DAY ORGANIZATIONAL MAINTENANCE ALW (a) 1-5	(b) 6-20	(c) 21-50	(d) 51-100	(7) ILLUSTRATION (a) FIG. NO.	(b) ITEM NO.
		GROUP 02 - COVER AND PANELS, EVAPORATOR SECTION									
PO		SCREW, MACHINE, PAN HEAD: BRACKET MTG MS35207-264 (96906)		EA	4	*	*	*	*	2	1
PO		SCREW, MACHINE, PAN HEAD: COVER MTG MS35207-264 (96906)		EA	2	*	*	*	*	2	3
PO		COVER, CONNECTOR 13211E4632 (06534)		EA	1	*	*	*	*	2	4
PO	5310-845-5472	RING, RETAINER, FASTENER 82-32-101-17 (94222)		EA	4	*	*	*	*	2	5
PO	4120-963-0221	STUD, FASTENER 82-11-280-16 (94222)		EA	4	*	*	*	*	2	6
PO		GASKET: PANEL, LEFT UPPER 5/32 IN.THK X 1/4 IN.W X 18 IN.LG MIL-R-6130 (81349)		IN.	18	*	*	*	*	2	7
PO		INSULATION, PANEL, LEFT UPPER 1/4 IN.THK, 5 IN.W X 5-1/2 IN.LG MIL-I-16562 (81349)		IN.	6	*	*	*	*	2	8
PO		RIVET, BLIND MS24662-5 (96906)		EA	4	*	*	*	*	2	9
X20		PLATE, IDENTIFICATION MIL-P-514 (81349)		EA	1					2	10
X20		PANEL, LEFT, UPPER 13211E4624 (06534)		EA	1					2	11
)	5310-845-5472	RING, RETAINER, FASTENER 82-11-280-16 (94222)		EA	4	*	*	*	*	2	12
)	4120-963-0221	STUD, FASTENER 82-11-280-16 (94222)		EA	4	*	*	*	*	2	13
)		GASKET: PANEL, LEFT LOWER 5/32 IN.THK X 1/4 IN.W X 27 IN.LG MIL-R-6130 (81349)		IN.	27	*	*	*	*	2	14
PO		INSULATION: PANEL, LEFT LOWER 1/4 IN.THK X 5-1/2 IN.W. X 8 IN.LG MIL-I-16562 (81349)		IN.	8	*	*	*	*	2	15
X20		PANEL, LEFT, LOWER 13211E4627 (06534)		EA	1					2	16
PO	5310-845-5472	RING, RETAINER, FASTENER 82-11-101-17 (94222)		EA	8	*	*	*	*	2	17
PO	4120-963-0221	STUD, FASTENER 82-11-280-16 (94222)		EA	8	*	*	*	*	2	18
PO		GASKET: PANEL, BACK 5/32 IN.THK X 1/4 IN.W X 48 IN.LG MIL-R-6130 (81349)		IN.	48	*	*	*	*	2	19
PO		INSULATION: PANEL, BACK 1/4 IN.THK X 5 IN. W X 5-1/2 IN.LG MIL-I-16562 (81349)		IN.	6	*	*	*	*	2	20

(1) SMR CODE	(2) FEDERAL STOCK NUMBER	(3) DESCRIPTION REF NUMBER & MFR CODE	USABLE ON CODE	(4) UNIT OF MEAS	(5) QTY INC IN UNIT	(6) 15-DAY ORGANIZATIONAL MAINTENANCE ALW (a) 1-5	(b) 6-20	(c) 21-50	(d) 51-100	(7) ILLUSTRATION (a) FIG. NO.	(b) ITEM NO.
X2O		PANEL, BACK 13211E4626 (06534)		EA	1					2	21
PO	5310-845-5472	RING, RETAINER, FASTENER 82-11-101-17 (94222)		EA	4	*	*	*	*	2	22
PO	4120-963-0221	STUD, FASTENER 82-11-280-16 (94222)		EA	4	*	*	*	*	2	23
PO		GASKET: PANEL, BOTTOM 5/32 IN.THK X 1/4 IN.W X 37 IN.LG. MIL-R-6130 (81349)		IN.	37	*	*	*	*	2	24
PO		INSULATION, PANEL, BOTTOM 1/4 IN.THK X 6 IN.W X 12 IN.LG MIL-I-16562 (81349)		IN.	12	*	*	*	*	2	25
X2O		PANEL, BOTTOM 13211E4629 (06534)		EA	1					2	26
PO		SCREW, MACHINE, PAN HEAD: BRACKET MTG MS35207-264 (96906)		EA	4	*	*	*	*	3	1
X2O	5310-845-5472	RING, RETAINER, FASTENER 82-11-101-17 (94222)		EA	1					3	3
PO	4120-963-0221	STUD, FASTENER 82-11-280-16 (94222)		EA	6	*	*	*	*	3	4
PO		GASKET: PANEL, RIGHT 5/32 IN.THK X 1/4 IN.W X 46 IN.LG MIL-R-6130 (81349)		IN.	46	*	*	*	*	3	5
PO		INSULATION: PANEL, RIGHT 1/4 IN.THK X 5 IN.W X 16 IN.LG MIL-I-16562 (81349)		IN.	16	*	*	*	*	3	6
PO		PANEL, RIGHT 13211E4625 (06534)		EA	1	*	*	*	*	3	7
PO	5310-845-5472	RING, RETAINER, FASTENER 82-32-101-17 (94222)		EA	4	*	*	*	*	3	8
PO	4120-963-0221	STUD, FASTENER 82-11-280-16 (94222)		EA	4	*	*	*	*	3	9
PO		GASKET: PANEL, TOP 5/32 IN.THK X 1/4 IN.W X 40 IN.LG MIL-R-6130 (81349)		IN.	40	*	*	*	*	3	10
PO		INSULATION: PANEL, TOP 1/4 IN.THK X 6 IN.W X 13 IN.LG MIL-I-16562 (81349)		IN.	13	*	*	*	*	3	11
X2O		PANEL, TOP 13211E4628 (06534)		EA	1					3	12
PO		PIN, COTTER MS24665-69 (96906)		EA	4	*	*	*	*	3	13
PO		WASHER, FLAT, ROUND MS27183-6 (96906)		EA	4	*	*	*	*	3	14
PO		SPRING, LOUVER 13211E4646 (06534)		EA	4	*	*	*	*	3	15

(1) SMR CODE	(2) FEDERAL STOCK NUMBER	(3) DESCRIPTION REF NUMBER & MFR CODE	USABLE ON CODE	(4) UNIT OF MEAS	(5) QTY INC IN UNIT	(6) 15-DAY ORGANIZATIONAL MAINTENANCE ALW (a) 1-5	(b) 6-20	(c) 21-50	(d) 51-100	(7) ILLUSTRATION (a) FIG. NO.	(b) ITEM NO.
X20		LOUVER 13211E4631 (06534)		EA	4					3	16
PO	5310-845-5472	RING, RETAINER, FASTENER 82-32-101-17 (94222)		EA	8	*	*	*	*	3	17
PO	4120-963-0221	STUD, FASTENER 82-11-280-16 (94222)		EA	6	*	*	*	*	3	18
PO		STUD, FASTENER 82-11-300-16 (94222)		EA	2	*	*	*	*	3	19
PO		GASKET: PANEL, FRONT 5/32 IN.THK X 1/4 IN.W X 31 IN.LG MIL-R-6130 (81349)		IN.	31	*	*	*	*	3	20
PO		INSULATION: PANEL, FRONT 1/4 IN.THK X 6 IN.W X 13 IN.LG MIL-I-1656 (81349)		IN.	13	*	*	*	*	3	21
X20		PANEL, FRONT 13211E4618 (06534)		EA	1					3	22
		GROUP 03 - CONTROL BOX AND RELATED PARTS									
PO	5310-845-5472	RING, RETAINER, FASTENER 82-32-101-17 (94222)		EA	4	*	*	*	*	4	1
PO	4120-963-0221	STUD, FASTENER 82-11-280-16 (94222)		EA	4	*	*	*	*	4	2
PO		GASKET: BOX, CONTROL 5/32 IN.THK X 1/4 IN.W X 15 IN.LG MIL-R-6130 (81349)		IN.	15	*	*	*	*	4	3
PO		RIVET, SOLID, COUNTERSINK MS20426A3-5 (96906)		EA	4	*	*	*	*	4	4
PO	5325-788-5635	RECEPTACLE 82-35-302-15 (94222)		EA	2	*	*	*	*	4	5
X20		RIVET, SOLID, UNIVERSAL HEAD MS20470A2-3 (96906)		EA	2					4	6
PO		PLATE, NAME, SWITCH 4 B39043-101 (06534)		EA	1	*	*	*	*	4	7
PO		RIVET, SOLID, UNIVERSAL HEAD MS20470A2-3 (96906)		EA	2	*	*	*	*	4	8
X20		PLATE, NAME, SWITCH 2 B39041-101 (06534)		EA	1					4	9
PO		RIVET, SOLID, UNIVERSAL HEAD MS20470A2-3 (96906)		EA	2	*	*	*	*	4	10
X20		PLATE, NAME, SWITCH 3 B39042-101 (06534)		EA	1					4	11

(1) SMR CODE	(2) FEDERAL STOCK NUMBER	(3) DESCRIPTION REF NUMBER & MFR CODE	USABLE ON CODE	(4) UNIT OF MEAS	(5) QTY INC IN UNIT	(6) 15-DAY ORGANIZATIONAL MAINTENANCE ALW (a) 1-5	(b) 6-20	(c) 21-50	(d) 51-100	(7) ILLUSTRATION (a) FIG. NO.	(b) ITEM NO.
PO		RIVET, SOLID, UNIVERSAL HEAD MS20470A2-3 (96906)		EA	2	*	*	*	*	4	12
X2O		PLATE, NAME, SWITCH 1 B39040-101 (06534)		EA	1					4	13
PO		SCREW, SET: KNOB, CONTROL, THERMOSTATIC 43017-3 (49742)		EA	1	*	*	*	*	4	14
PO		KNOB: CONTROL, THERMOSTATIC 15515 (49742)		EA	1	*	*	*	*	4	15
PO		SCREW, MACHINE, PAN HEAD: CONTROL THERMOSTATIC MTG 43644-8 (49742)		EA	2	*	*	*	*	4	16
PO	5930-817-7335	CONTROL, THERMOSTATIC C12-5010 (49742)		EA	1	*	*	*	*	4	17
PO		NUT, HEXAGON, FACE: SWITCH, TOGGLE MTG 15-404-6 (15605)		EA	2	*	*	*	*	4	18
PO		WASHER, LOCK, INTERNAL TOOTH: SWITCH, TOGGLE MTG 16-886 (15605)		EA	1	*	*	*	*	4	19
PO		RING, LOCKING: SWITCH, TOGGLE MTG 29-761 (15605)		EA	1	*	*	*	*	4	20
PO	5930-660-3953	SWITCH, TOGGLE, NO. 2 MS24525-22 (96906)		EA	1	*	*	*	*	4	21
PO		NUT, HEXAGON, FACE: SWITCH, TOGGLE MTG 15-404-6 (15605)		EA	2	*	*	*	*	4	22
PO		WASHER, LOCK, INTERNAL TOOTH: SWITCH, TOGGLE MTG 16-886 (15605)		EA	1	*	*	*	*	4	23
PO		RING, LOCKING: SWITCH, TOGGLE MTG 29-761 (15605)		EA	1	*	*	*	*	4	24
PO		SWITCH, TOGGLE MS24525-21 (96906)		EA	1	*	*	*	*	4	25
PO		SCREW, SET: KNOB MTG MS35223-28 (96906)		EA	1	*	*	*	*	4	26
PO	5355-995-6357	KNOB, BAR, SMALL, PLASTIC WITHOUT SKIRT MS25169P1B (96906)		EA	1	*	*	*	*	4	27
PO		SCREW, MACHINE, PAN HEAD: CONTROL ASSEMBLY, DAMPER MTG MS35206-224 (96906)		EA	1	*	*	*	*	4	28
PO		SCREW, MACHINE, PAN HEAD: CONTROL ASSEMBLY, DAMPER MTG MS35225-41 (96906)		EA	1	*	*	*	*	4	29
X2O		WIRE STOP: CONTROL ASSEMBLY, DAMPER MTG 13211E4763 (06534)		EA	1					4	30
PO		SCREW, MACHINE FLAT HEAD: CONTROL ASSEMBLY, CLAMP MTG MS35191-273 (96906)		EA	1	*	*	*	*	4	31

(1) SMR CODE	(2) FEDERAL STOCK NUMBER	(3) DESCRIPTION REF NUMBER & MFR CODE	USABLE ON CODE	(4) UNIT OF MEAS	(5) QTY INC IN UNIT	(6) 15-DAY ORGANIZATIONAL MAINTENANCE ALW (a) 1-5	(b) 6-20	(c) 21-50	(d) 51-100	(7) ILLUSTRATION (a) FIG. NO.	(b) ITEM NO.
PO		NUT, SELF-LOCKING: CONTROL ASSEMBLY CLAMP MTG MS21044N3 (96906)		EA	1	*	*	*	*	4	32
X2O		CLAMP, LOOP, CUSHIONED: CONTROL ASSEMBLY, DAMPER MTG MS21104D4 (96906)		EA	1					4	33
X2O		CONTROL ASSEMBLY, DAMPER 270-032-585 (70436)		EA	1					4	34
X2O		BOX, CONTROL 13211E4617 (06534)		EA	1					4	35
PO		SCREW, MACHINE, FLAT HEAD: CLAMP MTG MS35191-273 (96906)		EA	2	*	*	*	*	4	36
PO		NUT, SELF-LOCKING: CLAMP MTG MS21044N3 (96906)		EA	2	*	*	*	*	4	37
PO		CLAMP: WIRE HARNESS MTG MS21919DG8 (96906)		EA	2	*	*	*	*	4	38
		GROUP 04 - EVAPORATOR FAN MOTOR AND RELATED PARTS									
PO		SCREW, MACHINE, FLAT HEAD: MOTOR SUPPORT MTG MS35191-273 (96906)		EA	2	*	*	*	*	5	1
PO		SCREW, MACHINE, PAN HEAD: MOTOR MTG MS35206-243 (96906)		EA	4	*	*	*	*	5	2
PO		WASHER, LOCK, SPLIT: MOTOR MTG MS35338-42 (96906)		EA	4	*	*	*	*	5	3
PO		NUT, BLIND, RIVET MS27130-22K (96906)		EA	2	*	*	*	*	5	4
X2O		SUPPORT, MOTOR 13211E4717 (06534)		EA	2					5	5
PO		SCREW, MACHINE, FLAT HEAD: MOTOR SUPPORT MTG MS35191-273 (96906)		EA	2	*	*	*	*	5	6
PO		SCREW, MACHINE, PAN HEAD: MOTOR MTG MS35206-243 (96906)		EA	4	*	*	*	*	5	7
PO		WASHER, LOCK, SPLIT: MOTOR MTG MS35338-42 (96906)		EA	4	*	*	*	*	5	8
PO		NUT, BLIND, RIVET MS27130-22K (96906)		EA	2	*	*	*	*	5	9
X2O		SUPPORT, MOTOR 13211E4718 (06534)		EA	2					5	10
PO		SCREW, SET: FAN, EVAPORATOR MS3518-2 (96906)		EA	2	*	*	*	*	5	11
PO		FAN, EVAPORATOR A-23759-1 (60380)		EA	1	*	*	*	*	5	12
PO	6105-935-0376	MOTOR, EVAPORATOR, FAN 3715-6 (64731)		EA	1	*	*	*	*	5	13

(1) SMR CODE	(2) FEDERAL STOCK NUMBER	(3) DESCRIPTION REF NUMBER & MFR CODE	USABLE ON CODE	(4) UNIT OF MEAS	(5) QTY INC IN UNIT	(6) 15-DAY ORGANIZATIONAL MAINTENANCE ALW (a) 1-5	(b) 6-20	(c) 21-50	(d) 51-100	(7) ILLUSTRATION (a) FIG. NO.	(b) ITEM NO.
PO		PIN, COTTER MS24665-69 (96906)		EA	2	*	*	*	*	6	1
PO		WASHER, FLAT MS27183-6 (96906)		EA	2	*	*	*	*	6	2
X2O		ROD, LINK, DAMPER, CONTROL 13211E4723 (06534)		EA	1					6	3
PO		SCREW, MACHINE, FLAT HEAD: DAMPER, FRONT MTG MS35191-273 (96906)		EA	4	*	*	*	*	6	4
PO		NUT, BLIND RIVET MS27130-20K (96906)		EA	4	*	*	*	*	6	5
PO		PIN, COTTER MS24665-69 (96906)		EA	3	*	*	*	*	6	6
PO		WASHER, FLAT-ROUND MS27183-6 (96906)		EA	3	*	*	*	*	6	7
PO		PIN, STRAIGHT, HEADED-DRILLED SHANK MS20392-IC7 (96906)		EA	3	*	*	*	*	6	8
X2O		BAR, DAMPER 13211E4743 (06534)		EA	1					6	9
X2O		DAMPER, FRONT 13211E4726 (06534)		EA	1					6	10
PO		SCREW, MACHINE, FLAT HEAD: DAMPER, REAR MTG MS35191-273 (96906)		EA	4	*	*	*	*	6	11
PO		NUT, BLIND, RIVET MS27130-20K (96906)		EA	4	*	*	*	*	6	12
PO		PIN, COTTER, STEEL, CADMIUM PLATED 3/64 X 1/2 IN.LG MS24665-69 (96906)		EA	3	*	*	*	*	6	13
PO		WASHER, FLAT-ROUND MS27183-6 (96906)		EA	3	*	*	*	*	6	14
PO		PIN, STRAIGHT, HEADED-DRILLED SHANK MS20392-IC7 (96906)		EA	3	*	*	*	*	6	15
X2O		BAR, DAMPER 13211E4743 (06534)		EA	1					6	16
X2O		DAMPER, REAR 13211E4722 (06534)		EA	1					6	17
PO		SCREW, MACHINE, PAN HEAD: CLAMP MTG MS35207-264 (96906)		EA	2	*	*	*	*	7	1
PO		NUT, BLIND, RIVET MS27130-14K (96906)		EA	2	*	*	*	*	7	2
PO		CLAMP LOOP PLASTIC: SENSING BULB MTG MS25281-F6 (96906)		EA	2	*	*	*	*	7	3

(1) SMR CODE	(2) FEDERAL STOCK NUMBER	(3) DESCRIPTION REF NUMBER & MFR CODE	USABLE ON CODE	(4) UNIT OF MEAS	(5) QTY INC IN UNIT	(6) 15-DAY ORGANIZATIONAL MAINTENANCE ALW (a) 1-5	(b) 6-20	(c) 21-50	(d) 51-100	(7) ILLUSTRATION (a) FIG. NO.	(b) ITEM NO.
PO		SCREW, MACHINE, PAN HEAD: CLAMP MTG MS35207-264 (96906)		EA	2	*	*	*	*	7	4
PO		NUT, BLIND, RIVET MS27130-20K (96906)		EA	2	*	*	*	*	7	5
PO		CLAMP, BULB, THERMOSTAT 13211E4650 (06534)		EA	2	*	*	*	*	7	6
PO		NUT, SELF-LOCKING: POWER RELAY MTG MS21044-N04 (96906)		EA	1	*	*	*	*	7	7
PO	5945-835-9079	RELAY, POWER 219BBX134 (78290)		EA	1	*	*	*	*	7	8
PO	5961-978-7660	RECTIFIER, JUNCTION, SILICON IN1695 (03538)		EA	1	*	*	*	*	7	9
MO		ASSEMBLY, WIRE 13211E4757-4 (06534) MANUFACTURE FROM: WIRE, ELECTRICAL, 4 in. required MS25190-A-16 (96906) TERMINAL, LUG, 2 ea MS25036-53 (96906) MARKER, IDENTIFICATION, 1 ea MIL-M-2210 (81349)		EA	1					7	10
PO		NUT, PLAIN, HEXAGON MS35649-82 (96906)		EA	2	*	*	*	*	7	11
PO		WASHER, LOCK, SPLIT, HELICAL MS35338-42 (96906)		EA	2	*	*	*	*	7	12
PO		SCREW, MACHINE, PAN HEAD: RECEPTACLE MTG MS35206-249 (96906)		EA	2	*	*	*	*	7	13
PO		SCREW, MACHINE, PAN HEAD: CAPACITOR BRACKET MTG MS35206-245 (96906)		EA	2	*	*	*	*	7	15
PO		WASHER, LOCK, SPLIT, HELICAL MS35338-42 (96906)		EA	2	*	*	*	*	7	16
PO		NUT, BLIND, RIVET MS27130-14K (96906)		EA	2	*	*	*	*	7	17
X2O		BRACKET: CAPACITOR MTG 13211E4739 (06534)		EA	1					7	18
PO	5910-936-1282	CAPACITOR, MOTOR, RUN 49F6443 (01002)		EA	1	*	*	*	*	7	19
PO		GROMMET, RUBBER MS35489-14 (96906)		EA	1	*	*	*	*	7	20
PO		SCREW, MACHINE, FLAT HEAD: FAN GUARD MTG MS35191-273 (96906)		EA	4	*	*	*	*	7	21

(1) SMR CODE	(2) FEDERAL STOCK NUMBER	(3) DESCRIPTION REF NUMBER & MFR CODE	USABLE ON CODE	(4) UNIT OF MEAS	(5) QTY INC IN UNIT	(6) 15-DAY ORGANIZATIONAL MAINTENANCE ALW (a) 1-5	(b) 6-20	(c) 21-50	(d) 51-100	(7) ILLUSTRATION (a) FIG. NO.	(b) ITEM NO.
PO		NUT, BLIND, RIVET MS27130-20K (96906)		EA	4	*	*	*	*	7	22
PO		RIVET, SOLID: RECEPTACLE MTG MS20426A3-3 (96906)		EA	8	*	*	*	*	7	23
PO		RECEPTACLE 82-35-302-15 (94222)		EA	4	*	*	*	*	7	24
X2O	5325-788-5635	GUARD, FAN 13211E4716 (06534)		EA	1					7	25
		GROUP 05 - WIRING HARNESS, EVAPORATOR SECTION									
PO		SCREW, MACHINE, PAN HEAD: CONNECTOR MTG MS35206-217 (96906)		EA	4	*	*	*	*	8	1
PO		NUT, SELF-LOCKING: CONNECTOR MTG MS21044-N04 (96906)		EA	4	*	*	*	*	8	2
P2O	4130-840-8619	WIRING, HARNESS 13211E4747 (06534)		EA	1	*	*	*	*	8	3
X2O		STRAP, CABLE, ADJUSTABLE MS18034-4-2 (96906)		EA	27					8	4
PO	5935-836-0173	CONNECTOR, RECEPTACLE MS3102R-22-19P (96906)		EA	1	*	*	*	*	8	5
PO		TERMINAL, LUG MS25036-6 (96906)		EA	33	*	*	*	*	8	6
PO		TERMINAL, LUG MS25036-8 (96906)		EA	1	*	*	*	*	8	7
PO		TERMINAL, LUG MS25036-53 (96906)		EA	6	*	*	*	*	8	8
PO		WIRE, ELECTRICAL MS25190-A-16 (96906)		FT	65	*	*	*	*	8	9
		GROUP 06 - EXPANSION VALVE AND TUBING									
PO	5330-727-1286	GASKET 22546-17 (00624)		EA	1	*	*	*	*	9	8
PO		NUT, JAM: LIQUID LINE 5400-53-8 (00624)		EA	1	*	*	*	*	9	10
PO	5330-727-1286	GASKET 22546-17 (00624)		EA	1	*	*	*	*	9	14
PO		NUT, JAM: SUCTION LINE 5400-53-8 (00624)		EA	1	*	*	*	*	9	16
		GROUP 07 - EVAPORATOR, HEATER COILS, AND AIR FILTER									
PO	4130-987-5587	FILTER, AIR C39034-1 (06534)		EA	1	*	*	*	*	10	1

(1) SMR CODE	(2) FEDERAL STOCK NUMBER	(3) DESCRIPTION REF NUMBER & MFR CODE	USABLE ON CODE	(4) UNIT OF MEAS	(5) QTY INC IN UNIT	(6) 15-DAY ORGANIZATIONAL MAINTENANCE ALW (a) 1-5	(b) 6-20	(c) 21-50	(d) 51-100	(7) ILLUSTRATION (a) FIG. NO.	(b) ITEM NO.
PO		INSULATION: EVAPORATOR COIL 1/4 IN.THK X 1-1/2 IN.W X 12 IN.LG MIL-I-16562 (81349)		IN.	12	*	*	*	*	10	2
MO		WIRE LEAD 13211E4757-2 (06534) MANUFACTURE FROM: WIRE, ELECTRICAL, 2-1/2 in. required MS25190-A-16 (96906) TERMINAL, LUG, 2 ea MS25036-53 (96906)		EA	1					10	3
MO		WIRE LEAD 13211E4752-3 (06534) MANUFACTURE FROM: WIRE, ELECTRICAL, 2-1/2 in. required MS25190-A-16 (96906) TERMINAL, LUG, 2 ea MS25036-53 (96906)		EA	1					10	4
MO		WIRE LEAD 13211E4757-1 (06534) MANUFACTURE FROM: WIRE, ELECTRICAL, 2-1/2 in. required MS25190-A16 (96906) TERMINAL, LUG, 2 ea MS25036-53 (96906)		EA	1					10	5
PO		SCREW, MACHINE, PAN HEAD: THERMOSTAT MTG MS35206-233 (96906)		EA	1	*	*	*	*	10	6
PO		NUT, SELF-LOCKING: THERMOSTAT MTG MS21044-N06 (96906)		EA	1	*	*	*	*	10	7
PO	4130-733-7842	THERMOSTAT A22-110F (44218)		EA	1	*	*	*	*	10	8
		GROUP 08 - CONDENSATE PAN AND FRAME, EVAPORATOR SECTION									
PO		SCREW, MACHINE, FLAT HEAD: CONDENSATE PAN MTG MS35191-273 (96906)		EA	4	*	*	*	*	11	1
PO		NUT, BLIND RIVET MS27130-20K (96906)		EA	4	*	*	*	*	11	2
X20		CONDENSATE PAN 13211E4611 (06534)		EA	1					11	3
PO		RIVET: RECEPTACLE MTG MS20426A3-5 (96906)		EA	80	*	*	*	*	11	4
PO	5325-788-5635	RECEPTACLE 82-35-302-15 (94222)		EA	40	*	*	*	*	11	5
PO		NUT, BLIND RIVET MS27130-20K (96906)		EA	18	*	*	*	*	11	6

(1) SMR CODE	(2) FEDERAL STOCK NUMBER	(3) DESCRIPTION REF NUMBER & MFR CODE	USABLE ON CODE	(4) UNIT OF MEAS	(5) QTY INC IN UNIT	(6) 15-DAY ORGANIZATIONAL MAINTENANCE ALW (a) 1-5	(b) 6-20	(c) 21-50	(d) 51-100	(7) ILLUSTRATION (a) FIG. NO.	(b) ITEM NO.
		GROUP 09 - COVER AND PANELS, CONDENSER SECTION									
PO		SCREW, MACHINE, PAN HEAD: BRACKET MTG MS35207-204 (96906)		EA	5	*	*	*	*	12	1
PO		SCREW, MACHINE, PAN HEAD: COVER MTG MS35207-264 (96906)		EA	2	*	*	*	*	12	3
P2O		COVER, CONNECTOR 13211E4681 (06534)		EA	1	*	*	*	*	12	4
PO	5310-845-5472	RING, RETAINER, FASTENER 82-32-101-17 (94222)		EA	4	*	*	*	*	12	5
PO	4120-963-0221	STUD, FASTENER 82-11-280-16 (94222)		EA	4	*	*	*	*	12	6
X2O		GASKET: PANEL, RIGHT, UPPER 5/32 IN.THK X 1/4 IN.W X 39 IN.LG MIL-R-6130 (81349)		IN.	39					12	7
X2O		PANEL, RIGHT, UPPER 13211E4712 (06534)		EA	1					12	8
PO	5310-845-5472	RING, RETAINER, FASTENER 82-32-101-17 (94222)		EA	3	*	*	*	*	12	9
PO	4120-963-0221	STUD, FASTENER 82-11-280-16 (94222)		EA	3	*	*	*	*	12	10
PO		GASKET: PANEL, RIGHT, LOWER 5/32 IN.THK X 1/4 IN.W X 22 IN.LG MIL-R-6130 (81349)		IN.	22	*	*	*	*	12	11
X2O		PANEL, RIGHT, LOWER 13211E4714 (06534)		EA	1					12	12
PO		SCREW, MACHINE, PAN HEAD: COVER MTG MS35206-230 (96906)		EA	1	*	*	*	*	12	13
PO		WASHER, LOCK, SPLIT, HELICAL MS35338-41 (96906)		EA	1	*	*	*	*	12	14
PO		WASHER, FLAT AN960-6 (88044)		EA	1	*	*	*	*	12	15
X2O		COVER, ACCESS 13211E9786 (06534)		EA	1					12	16
PO		NUT, CLINCH 74-11-106-13 (24248)		EA	1	*	*	*	*	12	17
PO		GASKET: PANEL, TOP 5/32 IN.THK X 1/4 IN.W X 42 IN.LG MIL-R-6130 (81349)		IN.	42	*	*	*	*	12	18
PO		RIVET, SOLID: IDENTIFICATION PLATE MTG MS20470A4-4 (96906)		EA	4	*	*	*	*	12	19
X2O		PLATE, IDENTIFICATION MIL-P-514 (81349)		EA	1					12	20

(1) SMR CODE	(2) FEDERAL STOCK NUMBER	(3) DESCRIPTION REF NUMBER & MFR CODE	USABLE ON CODE	(4) UNIT OF MEAS	(5) QTY INC IN UNIT	(6) 15-DAY ORGANIZATIONAL MAINTENANCE ALW (a) 1-5	(b) 6-20	(c) 21-50	(d) 51-100	(7) ILLUSTRATION (a) FIG. NO.	(b) ITEM NO.
PO	5310-845-5472	RING, RETAINER, FASTENER 82-32-101-17 (94222)		EA	6	*	*	*	*	12	21
PO	4120-963-0221	STUD, FASTENER 82-11-280-16 (94222)		EA	6	*	*	*	*	12	22
PO		PANEL, TOP 13211E4753 (06534)		EA	1	*	*	*	*	12	23
PO	5310-845-5472	RING, RETAINER, FASTENER 82-32-101-17 (94222)		EA	3	*	*	*	*	12	24
PO	4120-963-0221	STUD, FASTENER 82-11-280-16 (94222)		EA	3	*	*	*	*	12	25
X2O		PANEL, LOWER, FRONT 13211E4689 (06534)		EA	1					12	26
PO		SCREW, MACHINE, PAN HEAD: PANEL MTG MS35207-264 (96906)		EA	4	*	*	*	*	12	27
X2O		PANEL, UPPER, FRONT 13211E4767 (06534)		EA	1					12	28
PO		SCREW, MACHINE, PAN HEAD: BRACKET MTG MS35207-264 (96906)		EA	6	*	*	*	*	13	1
PO	5310-845-5472	RING, RETAINER, FASTENER 82-32-101-17 (94222)		EA	6	*	*	*	*	13	3
PO	4120-963-0221	STUD, FASTENER 82-11-280-16 (96222)		EA	6	*	*	*	*	13	4
PO		GASKET: PANEL, LEFT SIDE 5/32 IN.THK X 1/4 IN.W X 52 IN.LG MIL-R-6130 (81349)		IN.	52	*	*	*	*	13	5
X2O		PANEL, LEFT SIDE 13211E4715 (06534)		EA	1					13	6
PO	5310-845-5472	RING, RETAINER, FASTENER 82-32-101-17 (94222)		EA	12	*	*	*	*	13	7
2O	4120-963-0221	STUD, FASTENER 82-11-280-16 (94222)		EA	12					13	8
PO		GASKET: PANEL, REAR 5/32 IN.THK X 1/4 IN.W X 73 IN.LG MIL-R-6130 (81349)		IN.	73	*	*	*	*	13	9
PO		RIVET, SOLID: INFORMATION PLATE MS20470AD4-4 (96906)		EA	4	*	*	*	*	13	10
X2O		INFORMATION PLATE, WIRING 13211E4746 (06534)		EA	1					13	11
X2O		PANEL, REAR 13211E4745 (06534)		EA	1					13	12
PO	5310-845-5472	RING, RETAINER, FASTENER 82-32-101-17 (94222)		EA	4	*	*	*	*	13	13
PO	4120-963-0221	STUD, FASTENER 82-11-280-16 (94222)		EA	4	*	*	*	*	13	14
X2O		PANEL, BOTTOM 13211E4713 (06534)		EA	1					13	15

(1) SMR CODE	(2) FEDERAL STOCK NUMBER	(3) DESCRIPTION REF NUMBER & MFR CODE	USABLE ON CODE	(4) UNIT OF MEAS	(5) QTY INC IN UNIT	(6) 15-DAY ORGANIZATIONAL MAINTENANCE ALW (a) 1-5	(b) 6-20	(c) 21-50	(d) 51-100	(7) ILLUSTRATION (a) FIG. NO.	(b) ITEM NO.
		GROUP 10 - WIRING HARNESS, CONDENSER SECTION									
PO		SCREW, MACHINE, PAN HEAD: CLAMP MTG MS35207-264 (96906)		EA	1	*	*	*	*	14	1
PO		CLAMP, LOOP, CUSHIONED MS21919-DG8 (96906)		EA	1	*	*	*	*	14	2
PO		SCREEN, MACHINE, PAN HEAD: CONNECTOR MTG MS35207-217 (96906)		EA	8	*	*	*	*	14	3
PO		NUT, SELF-LOCKING, HEXAGON MS21044-N04 (96906)		EA	8	*	*	*	*	14	4
PO		SCREW, MACHINE, FLAT HEAD: CONNECTOR BRACKET MTG MS35191-273 (96906)		EA	2	*	*	*	*	14	5
P2O		WIRING HARNESS 13217E1989 (06534)		EA	1	*	*	*	*	14	6
X2O		STRAP, CABLE, ADJUSTABLE MS18034-4-2 (96906)		EA	20					14	7
P2O		CONNECTOR MS3102R-22-19S (96906)		EA	1	*	*	*	*	14	8
P2O		CONNECTOR MS3102R-18-4P (96906)		EA	1	*	*	*	*	14	9
PO		SCREW, MACHINE, PAN HEAD: CONNECTOR MTG MS35206-217 (96906)		EA	4	*	*	*	*	14	10
PO		NUT, SELF-LOCKING: CONNECTOR MTG MS21044-N04 (96906)		EA	4	*	*	*	*	14	11
P2O		CONNECTOR, 90° 13211E4742 (06534)		EA	1	*	*	*	*	14	12
X2O		PLATE: CONNECTOR MTG 13211E4748 (06534)		EA	1					14	13
PO		TERMINAL, WIRE, FLAG TYPE 41532 (00779)		EA	9	*	*	*	*	14	14
PO		TERMINAL, LUG, CRIMP STYLE MS25036-106 (96906)		EA	24	*	*	*	*	14	15
P2O		WIRE, ELECTRICAL, 65 ft required MS25190-A-16 (96906)		FT	65					14	16
		GROUP 11 - CONDENSER FAN, FAN MOTOR, PRESSURE SWITCH, FUSE AND RECTIFIER									
PO		SCREW, MACHINE, PAN HEAD: MOTOR MTG MS35206-243 (96906)		EA	2	*	*	*	*	15	1
PO		WASHER, LOCK, SPLIT, HELICAL: MOTOR MTG MS35338-42 (96906)		EA	2	*	*	*	*	15	2
PO		SCREW, MACHINE, FLAT HEAD: BRACKET MTG MS35191-273 (96906)		EA	1	*	*	*	*	15	3
PO		NUT, BLIND, RIVET MS27130-27K (96906)		EA	1	*	*	*	*	15	4
X2O		BRACKET: MOTOR MTG 13211E4728 (06534)		EA	1					15	5

(1) SMR CODE	(2) FEDERAL STOCK NUMBER	(3) DESCRIPTION REF NUMBER & MFR CODE	USABLE ON CODE	(4) UNIT OF MEAS	(5) QTY INC IN UNIT	(6) 15-DAY ORGANIZATIONAL MAINTENANCE ALW (a) 1-5	(b) 6-20	(c) 21-50	(d) 51-100	(7) ILLUSTRATION (a) FIG. NO.	(b) ITEM NO.
PO		SCREW, MACHINE, FLAT HEAD: BRACKET MTG MS35191-273 (96906)		EA	1	*	*	*	*	15	6
PO		NUT, BLIND, RIVET MS27130-22K (96906)		EA	1	*	*	*	*	15	7
PO		SCREW, MACHINE, PAN HEAD: MOTOR MTG MS35206-243 (96906)		EA	2	*	*	*	*	15	8
PO		WASHER, LOCK, SPLIT, HELICAL: MOTOR MTG MS35338-42 (96906)		EA	2	*	*	*	*	15	9
X2O		BRACKET: MOTOR MTG 13211E4730 (06534)		EA	1					15	10
PO		SCREW, MACHINE, FLAT HEAD MS35191-273 (96906)		EA	2	*	*	*	*	15	11
PO		NUT, BLIND, RIVET MS27130-22K (96906)		EA	2	*	*	*	*	15	12
PO		SCREW, MACHINE, PAN HEAD: MOTOR MTG MS35206-243 (96906)		EA	4	*	*	*	*	15	13
PO		WASHER, LOCK, SPLIT, HELICAL: MOTOR MTG MS35338-42 (96906)		EA	4	*	*	*	*	15	14
X2O		BRACKET: MOTOR MTG 13211E4729 (06534)		EA	2					15	15
PO		SCREW, SET: CONDENSER FAN MTG 15231-8 (60380)		EA	1	*	*	*	*	15	16
P2O		FAN, CONDENSER P-1020-4 (60380)		EA	1	*	*	*	*	15	17
PO	6105-935-0376	MOTOR, CONDENSER, FAN 3515-6 (64731)		EA	1	*	*	*	*	15	18
PO		SCREW, MACHINE, PAN HEAD: SWITCH MTG MS35206-230 (96906)		EA	1	*	*	*	*	15	19
PO		WASHER, LOCK, SPRING, HELICAL: SWITCH MTG MS35338-41 (96906)		EA	2	*	*	*	*	15	20
PO		SCREW, MACHINE, FLAT HEAD: SWITCH BRACKET MTG MS35190-254 (96906)		EA	2	*	*	*	*	15	21
PO		SWITCH, PRESSURE 210AP40AN-4401 (92578)		EA	1	*	*	*	*	15	22
X2O		BRACKET: SWITCH MTG 13216E9787 (06534)		EA	1					15	23
PO		SCREW, MACHINE, PAN HEAD: RECTIFIER MTG MS35206-230 (96906)		EA	2	*	*	*	*	15	24
P2O		NUT, SELF-LOCKING: RECTIFIER MS21045-06 (96906)		EA	2					15	25
PO		WIRE, ELECTRICAL MS25190-A-16 (96906)		IN.	3	*	*	*	*	15	26
PO		TERMINAL LUG MS25036-53 (96906)		EA	1	*	*	*	*	15	27

(1) SMR CODE	(2) FEDERAL STOCK NUMBER	(3) DESCRIPTION REF NUMBER & MFR CODE	USABLE ON CODE	(4) UNIT OF MEAS	(5) QTY INC IN UNIT	(6) 15-DAY ORGANIZATIONAL MAINTENANCE ALW (a) 1-5	(b) 6-20	(c) 21-50	(d) 51-100	(7) ILLUSTRATION (a) FIG. NO.	(b) ITEM NO.
PO		RECTIFIER B391-1 (92310)		EA	1	*	*	*	*	15	28
PO	5920-280-8344	FUSE, CARTRIDGE FO250V 1/2 A (71400)		EA	1	*	*	*	*	15	29
PO		NUT, PLAIN, HEXAGON: FUSE HOLDER MS25082-10 (96906)		EA	1	*	*	*	*	15	30
X2O		HOLDER: FUSE FHL17G (71400)		EA	1					15	31
PO		SCREW, MACHINE, FLAT HEAD: BRACKET MTG MS35190-236 (96906)		EA	2	*	*	*	*	15	32
PO		NUT, SELF-LOCKING MS21045-06 (96906)		EA	2	*	*	*	*	15	33
X2O		BRACKET: FUSE 13211E4677 (06534)		EA	1					15	34
		GROUP 12 - REFRIGERATION COMPONENTS									
PO		SCREW, MACHINE, PAN HEAD: VALVE MTG MS35207-244 (96906)		EA	2	*	*	*	*	16	5
PO		WASHER, FLAT, ROUND: VALVE MTG MS27183-7 (96906)		EA	2	*	*	*	*	16	6
PO		CAP: SUCTION, VALVE 7618-46 (41947)		EA	1	*	*	*	*	16	8
PO		SCREW, MACHINE, PAN HEAD: SPACER MTG MS35206-243 (96906)		EA	2	*	*	*	*	16	9
PO		NUT, SELF-LOCKING: SPACER MTG MS21044-N08 (96906)		EA	2	*	*	*	*	16	10
X2O		SPACER: VALVE MTG 13216E5127 (06534)		EA	1					16	11
PO		NUT, JAM: COMPRESSOR, INLET LINE 5400-53-8 (00624)		EA	1	*	*	*	*	16	15
PO		NUT, PLAIN, HEXAGON MS51967-5 (96906)		EA	1	*	*	*	*	16	19
PO		WASHER, LOCK: SPRING, HELICAL MS35338-45 (96906)		EA	1	*	*	*	*	16	20
PO		WASHER, SHOULDER 13211E4764 (06534)		EA	1	*	*	*	*	16	21
PO		SCREW, CAP: HEXAGON HEAD MS90725-32 (96906)		EA	1	*	*	*	*	16	22
PO		SCREW, MACHINE, FLAT HEAD: ANGLE MTG MS35191-273 (96906)		EA	2	*	*	*	*	16	23
PO		NUT, BLIND, RIVET MS27130-22 (96906)		EA	2	*	*	*	*	16	24

(1) SMR CODE	(2) FEDERAL STOCK NUMBER	(3) DESCRIPTION REF NUMBER & MFR CODE	USABLE ON CODE	(4) UNIT OF MEAS	(5) QTY INC IN UNIT	(6) 15-DAY ORGANIZATIONAL MAINTENANCE ALW (a) 1-5	(b) 6-20	(c) 21-50	(d) 51-100	(7) ILLUSTRATION (a) FIG. NO.	(b) ITEM NO.
PO		SCREW, MACHINE, FLAT HEAD: COMPRESSOR MTG MS35190-305 (96906)		EA	4	*	*	*	*	17	1
PO		WASHER, SHOULDER: COMPRESSOR MTG 13211E4764 (06534)		EA	4	*	*	*	*	17	2
PO		WASHER, LOCK, SPLIT, HELICAL: COMPRESSOR MTG MS35338-45 (96906)		EA	4	*	*	*	*	17	3
PO		NUT, PLAIN, HEXAGON MS51967-5 (96906)		EA	4	*	*	*	*	17	4
X2O	4130-840-8594	LOCKWIRE: OVERLOAD MTG 40577 (59431)		EA	1					17	6
PO	6105-932-2430	OVERLOAD MRA4953 (80602)		EA	1	*	*	*	*	17	7
PO		SCREW, MACHINE, PAN HEAD: STRAP MTG MS35207-264 (96906)		EA	1	*	*	*	*	17	8
PO		NUT, SELF-LOCKING: STRAP MTG MS21044N3 (96906)		EA	1	*	*	*	*	17	9
X2O		STRAP: FILTER-DRIER MTG 13216E9796 (06534)		EA	1					17	10
PO	5330-805-2408	GASKET 22008-8 (00624)		EA	1	*	*	*	*	17	20
PO		SCREW, MACHINE, FLAT HEAD: BRACKET MTG MS35190-254 (96906)		EA	4	*	*	*	*	17	21
PO		NUT, BLIND, RIVET MS27130-14K (96906)		EA	4	*	*	*	*	17	22
X2O		CAP, FLARE A4544 (41947)		EA	1					17	27
X2O		CAP, VALVE 7618-46 (41947)		EA	1					17	28
		GROUP 13 - CAPACITORS, FAN SHROUD, CONDENSER COIL AND FRAME									
PO		SCREW, MACHINE, FLAT HEAD: CAPACITOR CLAMP MTG MS35190-254 (96906)		EA	2	*	*	*	*	18	1
PO		NUT, SELF-LOCKING: CAPACITOR CLAMP MTG MS21044-N08 (96906)		EA	2	*	*	*	*	18	2
PO		CLAMP, LOOP, CUSHIONED: CAPACITOR MTG MS21919DG28 (96906)		EA	2	*	*	*	*	18	3
PO		RESISTOR RC42GF153J (81349)		EA	1	*	*	*	*	18	4
PO	5910-933-0597	CAPACITOR: COMPRESSOR START 85508-3 (37942)		EA	1	*	*	*	*	18	5

(1) SMR CODE	(2) FEDERAL STOCK NUMBER	(3) DESCRIPTION REF NUMBER & MFR CODE	USABLE ON CODE	(4) UNIT OF MEAS	(5) QTY INC IN UNIT	(6) 15-DAY ORGANIZATIONAL MAINTENANCE ALW (a) 1-5	(b) 6-20	(c) 21-50	(d) 51-100	(7) ILLUSTRATION (a) FIG. NO.	(b) ITEM NO.
PO		SCREW, MACHINE, PAN HEAD: BRACKET MTG MS35206-243 (96906)		EA	2	*	*	*	*	18	6
PO		NUT, BLIND, RIVET MS27130-14K (96906)		EA	2	*	*	*	*	18	7
X2O		BRACKET: CAPACITOR MTG 13211E4758 (06534)		EA	1					18	8
PO	5910-934-2783	CAPACITOR: MOTOR RUN 49F6474 (01002)		EA	1	*	*	*	*	18	9
PO		SCREW, MACHINE, FLAT HEAD: BRACKET MTG MS35191-273 (96906)		EA	2	*	*	*	*	18	10
PO		NUT, BLIND, RIVET MS27130-22K (96906)		EA	2	*	*	*	*	18	11
X2O		BRACKET: CAPACITOR SUPPORT 13211E4759 (06534)		EA	1					18	12
PO		SCREW, MACHINE, PAN HEAD: BRACKET MTG MS35206-243 (96906)		EA	2	*	*	*	*	18	13
PO		NUT, BLIND, RIVET MS27130-14K (96906)		EA	2	*	*	*	*	18	14
X2O		BRACKET: CAPACITOR MTG 13211E4739 (06534)		EA	1					18	15
PO	5910-936-1282	CAPACITOR, MOTOR RUN 49F6443 (01002)		EA	1	*	*	*	*	18	16
PO		SCREW, MACHINE, PAN HEAD: RELAY MTG MS35206-243 (96906)		EA	2	*	*	*	*	18	17
PO		RELAY, COMPRESSOR START 6409-30-192 (82647)		EA	1	*	*	*	*	18	18
PO		SCREW, MACHINE, PAN HEAD: BRACKET MTG MS35206-245 (96906)		EA	2	*	*	*	*	18	19
PO		NUT, BLIND, RIVET MS27130-14K (96906)		EA	2	*	*	*	*	18	20
X2O		BRACKET: RELAY MTG 13211E4733 (06534)		EA	1					18	21
PO		SCREW, MACHINE, PAN HEAD: TERMINAL BOARD MTG MS35206-230 (96906)		EA	4	*	*	*	*	18	22
PO		NUT, SELF-LOCKING: TERMINAL BOARD MTG MS21045-06 (96906)		EA	4	*	*	*	*	18	23
X2O		BOARD, TERMINAL 37TB13 (75382)		EA	1					18	24
PO		SCREW, MACHINE, PAN HEAD: SHROUD MTG MS35207-264 (96906)		EA	8	*	*	*	*	18	25

(1) SMR CODE	(2) FEDERAL STOCK NUMBER	(3) DESCRIPTION REF NUMBER & MFR CODE	USABLE ON CODE	(4) UNIT OF MEAS	(5) QTY INC IN UNIT	(6) 15-DAY ORGANIZATIONAL MAINTENANCE ALW (a) 1-5	(b) 6-20	(c) 21-50	(d) 51-100	(7) ILLUSTRATION (a) FIG. NO.	(b) ITEM NO.
PO		WASHER, LOCK, EXTERNAL TOOTH: SHROUD MTG MS35335-18 (96906)		EA	8	*	*	*	*	18	26
PO		NUT, BLIND, RIVET MS27130-22K (96906)		EA	6	*	*	*	*	18	27
X2O		SHROUD, FAN 13211E4732 (06534)		EA	1					18	28
PO		SCREW, MACHINE, FLAT HEAD: COIL MTG MS35191-273 (96906)		EA	6	*	*	*	*	18	29
PO		NUT, BLIND, RIVET MS27130-22K (96906)		EA	10	*	*	*	*	18	30
PO		RIVET: RECEPTACLE MTG MS20426A3-5 (96906)		EA	72	*	*	*	*	18	32
PO	5325-788-5635	RECEPTACLE 82-35-302-15 (94222)		EA	36	*	*	*	*	18	33
PO		NUT, BLIND, RIVET MS27130-20K (96906)		EA	22	*	*	*	*	18	34

(1) SMR CODE	(2) FEDERAL STOCK NUMBER	(3) DESCRIPTION REF NUMBER & MFR CODE	USABLE ON CODE	(4) UNIT OF MEAS	(5) QTY INC IN UNIT	(6) 30-DAY DS MAINT ALLOWANCE (a) 1-20	(b) 21-50	(c) 51-100	(7) 30-DAY GS MAINT ALLOWANCE (a) 1-20	(b) 21-50	(c) 51-100	(8) 1-YR ALW PER 100 EQUIP CNTGY	(9) ILLUSTRATION (a) FIG. NO.	(b) ITEM NO.
		SECTION V - REPAIR PARTS FOR DS AND GS MAINTENANCE												
		GROUP 01 - ELECTRICAL CABLE AND INTERCONNECTING HOSES												
PF	4130-842-5339	ASSEMBLY, HOSE, INTERCONNECTING, LIQUID LINE A154054-8-6S-60 (00624)		EA	1	*	*	*	*	*	*	*	1	1
PF	5330-727-1286	GASKET 22546-17 (00624)		EA	2	*	*	*	*	*	*	*	1	2
PF	4730-613-9862	COUPLING, HALF 5400-S5-8 (00624)		EA	2	*	*	*	*	*	*	*	1	3
XI		ASSEMBLY, VALVE AND SLEEVE 5400-S19-8 (00624)		EA	2								1	4
PF	4130-895-3069	ASSEMBLY, HOSE, INTERCONNECTING, SUCTION LINE A15404-8-8S-60 (00624)		EA	1	*	*	*	*	*	*	*	1	5
PF	5330-727-1286	GASKET 22546-17 (00624)		EA	2	*	*	*	*	*	*	*	1	6
PF	4730-613-9862	COUPLING, HALF 5400-S5-8 (00624)		EA	2	*	*	*	*	*	*	*	1	7
XI		ASSEMBLY, VALVE AND SLEEVE 5400-S19-8 (00624)		EA	2								1	8
MO	4130-842-5336	ASSEMBLY, CABLE, ELECTRICAL, INTERCONNECTING 13211E4608-2 (06534) MANUFACTURE FROM: WIRE, ELECTRICAL, 60 ft required MIL-W-5086/1 (81349) INSULATION, ELECTRICAL, 5 ft required MIL-I-631 (81349) CONNECTOR, PLUG, ELECTRICAL, FEMALE, 1 ea FSN 5935-826-2174 CONNECTOR, PLUG, ELECTRICAL, MALE, 1 ea FSN 5935-817-3171		EA	1								1	9
PO		CONNECTOR, PLUG, ELECTRICAL MS3106R-18-4S (96906)		EA	1	*	*	*	*	*	*	*	1	10
P2O	4730-613-9864	CAP, DUST 5400-S6-8 (00624)		EA	1	*	*	*	*	*	*	*	1	11
P2O	4730-613-9864	CAP, DUST 5400-S6-8 (00624)		EA	1	*	*	*	*	*	*	*	1	12
P2O	4730-613-9864	CAP, DUST 5400-S6-8 (00624)		EA	1	*	*	*	*	*	*	*	1	13
P2O	4730-613-9864	CAP, DUST 5400-S6-8 (00624)		EA	1	*	*	*	*	*	*	*	1	14
PO		RIVET, SOLID: CAP RTG MS20470AD4-5 (96906)		EA	1	*	*	*	*	*	*	*	1	15
P2O		CAP, ELECTRICAL CONNECTOR, RECEPTACLE, DUST WITH CHAIN MS25043-22 (96906)		EA	1	*	*	*	*	*	*	*	1	16

(1) SMR CODE	(2) FEDERAL STOCK NUMBER	(3) DESCRIPTION REF NUMBER & MFR CODE	USABLE ON CODE	(4) UNIT OF MEAS	(5) QTY INC IN UNIT	(6) 30-DAY DS MAINT ALLOWANCE (a) 1-20	(b) 21-50	(c) 51-100	(7) 30-DAY GS MAINT ALLOWANCE (a) 1-20	(b) 21-50	(c) 51-100	(8) 1-YR ALW PER 100 EQUIP CNTGY	(9) ILLUSTRATION (a) FIG. NO.	(b) ITEM NO.
PO		RIVET, SOLID: CAP RTG MS20470AD4-5 (96906)		EA	1	*	*	*	*	*	*	*	1	17
P2O		CAP, ELECTRICAL CONNECTOR, RECEPTACLE, DUST WITH CHAIN MS25043-18 (96906)		EA	1	*	*	*	*	*	*	*	1	18
PO		RIVET, SOLID: CAP RTG MS20470AD4-5 (96906)		EA	1	*	*	*	*	*	*	*	1	19
P2O		CAP, ELECTRICAL CONNECTOR, RECEPTACLE, DUST WITH CHAIN MS25043-22 (96906)		EA	1	*	*	*	*	*	*	*	1	20
PO		SCREW, MACHINE, PAN HEAD: CHAIN MTG MS350206-227 (96906)		EA	1	*	*	*	*	*	*	*	1	21
PO		NUT, SELF-LOCKING, HEXAGON: CHAIN MTG MS21045-06 (96906)		EA	1	*	*	*	*	*	*	*	1	22
P2O		CAP, ELECTRICAL CONNECTOR, RECEPTACLE, DUST WITH CHAIN MS25043-12C (96906)		EA	1	*	*	*	*	*	*	*	1	23
PO		CONNECTOR, PLUG, ELECTRICAL MS3106A-145-7P (96906)		EA	1	*	*	*	*	*	*	*	1	24
P2O		WIRE, ELECTRICAL MS25190-A-16 (96906)		EA	1	*	*	*	*	*	*	*	1	25
		GROUP 02 - COVER AND PANELS, EVAPORATOR SECTION												
PO		SCREW, MACHINE, PAN HEAD: BRACKET MTG MS35207-264 (96906)		EA	4	*	*	*	*	*	*	*	2	1
X2F		BRACKET, MTG 13211E4727 (06534)		EA	1								2	2
PO		SCREW, MACHINE, PAN HEAD: COVER MTG MS35207-264 (96906)		EA	2	*	*	*	*	*	*	*	2	3
PO		COVER, CONNECTOR 13211E4632 (06534)		EA	1	*	*	*	*	*	*	*	2	4
PO	5310-845-5472	RING, RETAINER, FASTENER 82-32-101-17 (94222)		EA	4	*	*	*	*	*	*	*	2	5
PO	4120-963-0221	STUD, FASTENER 82-11-280-16 (94222)		EA	4	*	*	*	*	*	*	*	2	6
PO		GASKET: PANEL, LEFT UPPER 5/32 IN. THK X 1/4 IN. W X 18 IN. LG MIL-R-6130 (81349)		IN.	18	*	*	*	*	*	*	*	2	7
PO		INSULATION, PANEL, LEFT UPPER 1/4 IN. THK, 5 IN. W X 5-1/2 IN. LG MIL-I-16562 (81349)		IN.	6	*	*	*	*	*	*	*	2	8
PO		RIVET, BLIND MS24662-5 (96906)		EA	4	*	*	*	*	*	*	*	2	9
X2O		PLATE, IDENTIFICATION MIL-P-514 (81349)		EA	1								2	10
X2O		PANEL, LEFT, UPPER 13211E4624 (06534)		EA	1								2	11

(1) SMR CODE	(2) FEDERAL STOCK NUMBER	(3) DESCRIPTION REF NUMBER & MFR CODE	USABLE ON CODE	(4) UNIT OF MEAS	(5) QTY INC IN UNIT	(6) 30-DAY DS MAINT ALLOWANCE (a) 1-20	(b) 21-50	(c) 51-100	(7) 30-DAY GS MAINT ALLOWANCE (a) 1-20	(b) 21-50	(c) 51-100	(8) 1-YR ALW PER 100 EQUIP CNTGY	(9) ILLUSTRATION (a) FIG. NO.	(b) ITEM NO.
PO	5310-845-5472	RING, RETAINER, FASTENER 82-11-280-16 (94222)		EA	4	*	*	*	*	*	*	*	2	12
PO	4120-963-0221	STUD, FASTENER 82-11-280-16 (94222)		EA	4	*	*	*	*	*	*	*	2	13
PO		GASKET: PANEL, LEFT,LOWER 5/32 IN. THK X 1/4 IN.W X 27 IN. LG MIL-R-6130 (81349)		IN.	27	*	*	*	*	*	*	*	2	14
PO		INSULATION: PANEL, LEFT,LOWER 1/4 IN.THK X 5-1/2 IN.W X 8 IN.LG MIL-I-16562 (81349)		IN.	8	*	*	*	*	*	*	*	2	15
X2O		PANEL, LEFT, LOWER 13211E4627 (06534)		EA	1								2	16
PO	5310-845-5472	RING, RETAINER, FASTENER 82-11-101-17 (94222)		EA	8	*	*	*	*	*	*	*	2	17
PO	4120-963-0221	STUD, FASTENER 82-11-280-16 (94222)		EA	8	*	*	*	*	*	*	*	2	18
PO		GASKET: PANEL, BACK 5/32 IN.THK X 1/4 IN.W X 48 IN.LG MIL-R-6130 (81349)		IN.	48	*	*	*	*	*	*	*	2	19
PO		INSULATION: PANEL, BACK 1/4 IN.THK X 5 IN. W X 5-1/2 IN.LG MIL-I-16562 (81349)		IN.	6	*	*	*	*	*	*	*	2	20
X2O		PANEL, BACK 13211E4626 (06534)		EA	1								2	21
PO	5310-845-5472	RING, RETAINER, FASTENER 82-11-101-17 (94222)		EA	4	*	*	*	*	*	*	*	2	22
PO	4120-963-0221	STUD, FASTENER 82-11-280-16 (94222)		EA	4	*	*	*	*	*	*	*	2	23
PO		GASKET: PANEL, BOTTOM 5/32 IN. THK X 1/4 IN.W X 37 IN.LG MIL-R-6130 (81349)		IN.	37	*	*	*	*	*	*	*	2	24
PO		INSULATION: PANEL, BOTTOM 1/4 IN.THK X 6 IN. W X 12 IN.LG MIL-I-16562 (81349)		IN.	12	*	*	*	*	*	*	*	2	25
X2O		PANEL, BOTTOM 13211E4629 (06534)		EA	1								2	26
PO		SCREW, MACHINE; PAN HEAD: BRACKET MTG MS35207-264 (96906)		EA	4	*	*	*	*	*	*	*	3	1
X2F		BRACKET, MTG 13211E4754 (06534)		EA	1								3	2
X2O	5310-845-5472	RING, RETAINER, FASTENER 82-11-101-17 (94222)		EA	1								3	3
PO	4120-963-0221	STUD, FASTENER 82-11-280-16 (94222)		EA	6	*	*	*	*	*	*	*	3	4
PO		GASKET: PANEL, RIGHT 5/32 IN.THK X 1/4 IN.W X 46 IN.LG MIL-R-6130 (81349)		IN.	46	*	*	*	*	*	*	*	3	5

(1) SMR CODE	(2) FEDERAL STOCK NUMBER	(3) DESCRIPTION REF NUMBER & MFR CODE	USABLE ON CODE	(4) UNIT OF MEAS	(5) QTY INC IN UNIT	(6) 30-DAY DS MAINT ALLOWANCE (a) 1-20	(b) 21-50	(c) 51-100	(7) 30-DAY GS MAINT ALLOWANCE (a) 1-20	(b) 21-50	(c) 51-100	(8) 1-YR ALW PER 100 EQUIP CNTGY	(9) ILLUSTRATION (a) FIG. NO.	(b) ITEM NO.
PO		INSULATION: PANEL, RIGHT 1/4 IN.THK X 5 IN.W X 16 IN.LG MIL-I-16562 (81349)		IN.	16	*	*	*	*	*	*	*	3	6
PO		PANEL, RIGHT 13211E4625 (06534)		EA	1	*	*	*	*	*	*	*	3	7
PO	5310-845-5472	RING, RETAINER, FASTENER 82-32-101-17 (94222)		EA	4	*	*	*	*	*	*	*	3	8
PO	4120-963-0221	STUD, FASTENER 82-11-280-16 (94222)		EA	4	*	*	*	*	*	*	*	3	9
PO		GASKET: PANEL, TOP 5/32 IN.THK X 1/4 IN.W X 40 IN.LG MIL-R-6130 (81349)		IN.	40	*	*	*	*	*	*	*	3	10
PO		INSULATION: PANEL, TOP 1/4 IN.THK X 6 IN.W X 13 IN.LG MIL-I-16562 (81349)		IN.	13	*	*	*	*	*	*	*	3	11
X20		PANEL, TOP 13211E4628 (06534)		EA	1								3	12
PO		PIN, COTTER MS24665-69 (96906)		EA	4	*	*	*	*	*	*	*	3	13
PO		WASHER, FLAT, ROUND MS27183-6 (96906)		EA	4	*	*	*	*	*	*	*	3	14
PO		SPRING, LOUVER 13211E4646 (06534)		EA	4	*	*	*	*	*	*	*	3	15
X20		LOUVER 13211E4631 (06534)		EA	4								3	16
PO	5310-845-5472	RING, RETAINER, FASTENER 82-32-101-17 (94222)		EA	8	*	*	*	*	*	*	*	3	17
PO	4120-963-0221	STUD, FASTENER 82-11-280-16 (94222)		EA	6	*	*	*	*	*	*	*	3	18
PO		STUD, FASTENER 82-11-300-16 (94222)		EA	2	*	*	*	*	*	*	*	3	19
PO		GASKET: PANEL, FRONT 5/32 IN.THK X 1/4 IN.W X 31 IN.LG MIL-R-6130 (81349)		IN.	31	*	*	*	*	*	*	*	3	20
PO		INSULATION: PANEL, FRONT 1/4 IN.THK X 6 IN.W X 13 IN.LG MIL-I-16562 (81349)		IN.	13	*	*	*	*	*	*	*	3	21
X20		PANEL, FRONT 13211E4618 (06534)		EA	1								3	22
		GROUP 03 - CONTROL BOX AND RELATED PARTS												
PO	5310-845-5472	RING, RETAINER, FASTENER 82-32-101-17 (94222)		EA	4	*	*	*	*	*	*	*	4	1
PO	4120-963-0221	STUD, FASTENER 82-11-280-16 (94222)		EA	4	*	*	*	*	*	*	*	4	2
PO		GASKET: BOX, CONTROL 5/32 IN.THK X 1/4 IN.W X 15 IN.LG MIL-R-6130 (81349)		IN.	15	*	*	*	*	*	*	*	4	3

(1) SMR CODE	(2) FEDERAL STOCK NUMBER	(3) DESCRIPTION REF NUMBER & MFR CODE	USABLE ON CODE	(4) UNIT OF MEAS	(5) QTY INC IN UNIT	(6) 30-DAY DS MAINT ALLOWANCE (a) 1-20	(b) 21-50	(c) 51-100	(7) 30-DAY GS MAINT ALLOWANCE (a) 1-20	(b) 21-50	(c) 51-100	(8) 1-YR ALW PER 100 EQUIP CNTGY	(9) ILLUSTRATION (a) FIG. NO.	(b) ITEM NO.
PO		RIVET, SOLID, COUNTERSINK MS20426A3-5 (96906)		EA	4	*	*	*	*	*	*	*	4	4
PO	5325-788-5635	RECEPTACLE 82-35-302-15 (94222)		EA	2	*	*	*	*	*	*	*	4	5
X2O		RIVET, SOLID, UNIVERSAL HEAD MS20470A2-3 (96906)		EA	2								4	6
PO		PLATE, NAME, SWITCH 4 B39043-101 (06534)		EA	1	*	*	*	*	*	*	*	4	7
PO		RIVET, SOLID, UNIVERSAL HEAD MS20470A2-3 (96906)		EA	2	*	*	*	*	*	*	*	4	8
X2O		PLATE, NAME, SWITCH 2 B39041-101 (06534)		EA	1								4	9
PO		RIVET, SOLID, UNIVERSAL HEAD MS20470A2-3 (96906)		EA	2	*	*	*	*	*	*	*	4	10
X2O		PLATE, NAME, SWITCH 3 B39042-101 (06534)		EA	1								4	11
PO		RIVET, SOLID, UNIVERSAL HEAD MS20470A2-3 (96906)		EA	2	*	*	*	*	*	*	*	4	12
X2O		PLATE, NAME, SWITCH 1 B39040-101 (06534)		EA	1								4	13
PO		SCREW, SET: KNOB, CONTROL, THERMOSTATIC 43017-3 (49742)		EA	1	*	*	*	*	*	*	*	4	14
PO		KNOB: CONTROL, THERMOSTATIC 15515 (49742)		EA	1	*	*	*	*	*	*	*	4	15
PO		SCREW, MACHINE, PAN HEAD: CONTROL, THERMOSTATIC MTG 43644-8 (49742)		EA	2	*	*	*	*	*	*	*	4	16
PO	5930-817-7335	CONTROL, THERMOSTATIC C12-5010 (49742)		EA	1	*	*	*	*	*	*	*	4	17
PO		NUT, HEXAGON, FACE: SWITCH, TOGGLE MTG 15-404-6 (15605)		EA	2	*	*	*	*	*	*	*	4	18
PO		WASHER, LOCK, INTERNAL TOOTH: SWITCH, TOGGLE MTG 16-886 (15605)		EA	1	*	*	*	*	*	*	*	4	19
PO		RING, LOCKING: SWITCH, TOGGLE MTG 29-761 (15605)		EA	1	*	*	*	*	*	*	*	4	20
PO	5930-660-3953	SWITCH, TOGGLE, NO. 2 MS24525-22 (96906)		EA	1	*	*	*	*	*	*	*	4	21
PO		NUT, HEXAGON, FACE: SWITCH, TOGGLE MTG 15-404-6 (15605)		EA	2	*	*	*	*	*	*	*	4	22
PO		WASHER, LOCK, INTERNAL TOOTH: SWITCH, TOGGLE MTG 16-886 (15605)		EA	1	*	*	*	*	*	*	*	4	23
PO		RING, LOCKING: SWITCH, TOGGLE MTG 29-761 (15605)		EA	1	*	*	*	*	*	*	*	4	24
PO		SWITCH, TOGGLE MS24525-21 (96906)		EA	1	*	*	*	*	*	*	*	4	25
PO		SCREW, SET: KNOB MTG MS35223-28 (96906)		EA	1	*	*	*	*	*	*	*	4	26

(1) SMR CODE	(2) FEDERAL STOCK NUMBER	(3) DESCRIPTION REF NUMBER & MFR CODE	USABLE ON CODE	(4) UNIT OF MEAS	(5) QTY INC IN UNIT	(6) 30-DAY DS MAINT ALLOWANCE (a) 1-20	(b) 21-50	(c) 51-100	(7) 30-DAY GS MAINT ALLOWANCE (a) 1-20	(b) 21-50	(c) 51-100	(8) 1-YR ALW PER 100 EQUIP CNTGY	(9) ILLUSTRATION (a) FIG. NO.	(b) ITEM NO.
PO	5355-995-6357	KNOB, BAR, SMALL, PLASTIC WITHOUT SKIRT MS25169P1B (96906)		EA	1	*	*	*	*	*	*	*	4	27
PO		SCREW, MACHINE, PAN HEAD: CONTROL ASSEMBLY, DAMPER MTG MS35206-224 (96906)		EA	1	*	*	*	*	*	*	*	4	28
PO		SCREW, MACHINE, PAN HEAD: CONTROL ASSEMBLY, DAMPER MTG MS35225-41 (96906)		EA	1	*	*	*	*	*	*	*	4	29
X2O		WIRE STOP: CONTROL ASSEMBLY, DAMPER MTG 13211E4763 (06534)		EA	1								4	30
PO		SCREW, MACHINE FLAT HEAD: CONTROL ASSEMBLY, CLAMP MTG MS35191-273 (96906)		EA	1	*	*	*	*	*	*	*	4	31
PO		NUT, SELF-LOCKING: CONTROL ASSEMBLY CLAMP MTG MS21044N3 (96906)		EA	1	*	*	*	*	*	*	*	4	32
X2O		CLAMP, LOOP, CUSHIONED: CONTROL ASSEMBLY, DAMPER MTG MS21104D4 (96906)		EA	1								4	33
(2O		CONTROL ASSEMBLY, DAMPER 270-032-585 (70436)		EA	1								4	34
X2O		BOX, CONTROL 13211E4617 (06534)		EA	1								4	35
PO		SCREW, MACHINE, FLAT HEAD: CLAMP MTG MS35191-273 (96906)		EA	2	*	*	*	*	*	*	*	4	36
PO		NUT, SELF-LOCKING: CLAMP MTG MS21044N3 (96906)		EA	2	*	*	*	*	*	*	*	4	37
PO		CLAMP: WIRE HARNESS MTG MS21919DG8 (96906)		EA	2	*	*	*	*	*	*	*	4	38
		GROUP 04 - EVAPORATOR FAN MOTOR AND RELATED PARTS												
PO		SCREW, MACHINE, FLAT HEAD: MOTOR SUPPORT MTG MS35191-273 (96906)		EA	2	*	*	*	*	*	*	*	5	1
PO		SCREW, MACHINE, PAN HEAD: MOTOR MTG MS35206-243 (96906)		EA	4	*	*	*	*	*	*	*	5	2
PO		WASHER, LOCK, SPLIT: MOTOR MTG MS35338-42 (96906)		EA	4	*	*	*	*	*	*	*	5	3
PO		NUT, BLIND, RIVET MS27130-22K (96906)		EA	2	*	*	*	*	*	*	*	5	4
X2O		SUPPORT, MOTOR 13211E4717 (06534)		EA	2								5	5
PO		SCREW, MACHINE, FLAT HEAD: MOTOR SUPPORT MTG MS35191-273 (96906)		EA	2	*	*	*	*	*	*	*	5	6
PO		SCREW, MACHINE, PAN HEAD: MOTOR MTG MS35206-243 (96906)		EA	4	*	*	*	*	*	*	*	5	7
PO		WASHER, LOCK, SPLIT: MOTOR MTG MS35338-42 (96906)		EA	4	*	*	*	*	*	*	*	5	8
PO		NUT, BLIND, RIVET MS27130-22K (96906)		EA	2	*	*	*	*	*	*	*	5	9

(1) SMR CODE	(2) FEDERAL STOCK NUMBER	(3) DESCRIPTION REF NUMBER & MFR CODE	USABLE ON CODE	(4) UNIT OF MEAS	(5) QTY INC IN UNIT	(6) 30-DAY DS MAINT ALLOWANCE (a) 1-20	(b) 21-50	(c) 51-100	(7) 30-DAY GS MAINT ALLOWANCE (a) 1-20	(b) 21-50	(c) 51-100	(8) 1-YR ALW PER 100 EQUIP CNTGY	(9) ILLUSTRATION (a) FIG. NO.	(b) ITEM NO.
X20		SUPPORT, MOTOR 13211E4718 (06534)		EA	2								5	10
PO		SCREW, SET: FAN, EVAPORATOR MS3518-2 (96906)		EA	2	*	*	*	*	*	*	*	5	11
PO		FAN, EVAPORATOR A-23759-1 (60380)		EA	1	*	*	*	*	*	*	*	5	12
PO	6105-935-0376	MOTOR, EVAPORATOR, FAN 3715-6 (64731)		EA	1	*	*	*	*	*	*	*	5	13
PO		PIN, COTTER MS24665-69 (96906)		EA	2	*	*	*	*	*	*	*	6	1
PO		WASHER, FLAT MS27183-6 (96906)		EA	2	*	*	*	*	*	*	*	6	2
X20		ROD, LINK, DAMPER, CONTROL 13211E4723 (06534)		EA	1								6	3
PO		SCREW, MACHINE, FLAT HEAD: DAMPER, FRONT MTG MS35191-273 (96906)		EA	4	*	*	*	*	*	*	*	6	4
PO		NUT, BLIND, RIVET MS27130-20K (96906)		EA	4	*	*	*	*	*	*	*	6	
PO		PIN, COTTER MS24665-69 (96906)		EA	3	*	*	*	*	*	*	*	6	
PO		WASHER, FLAT-ROUND MS27183-6 (96906)		EA	3	*	*	*	*	*	*	*	6	7
PO		PIN, STRAIGHT, HEADED-DRILLED SHANK MS20392-IC7 (96906)		EA	3	*	*	*	*	*	*	*	6	8
X20		BAR, DAMPER 13211E4743 (06534)		EA	1								6	9
X20		DAMPER, FRONT 13211E4726 (06534)		EA	1								6	10
PO		SCREW, MACHINE, FLAT HEAD: DAMPER, REAR MTG MS35191-273 (96906)		EA	4	*	*	*	*	*	*	*	6	11
PO		NUT, BLIND, RIVET MS27130-20K (96906)		EA	4	*	*	*	*	*	*	*	6	12
PO		PIN, COTTER, STEEL, CADMIUM PLATED 3/64 X 1/2 IN.LG MS24665-69 (96906)		EA	3	*	*	*	*	*	*	*	6	13
PO		WASHER, FLAT-ROUND MS27183-6 (96906)		EA	3	*	*	*	*	*	*	*	6	14
PO		PIN, STRAIGHT, HEADED-DRILLED SHANK MS20392-IC7 (96906)		EA	3	*	*	*	*	*	*	*	6	15
X20		BAR, DAMPER 13211E4743 (06534)		EA	1								6	16
X20		DAMPER, REAR 13211E4722 (06534)		EA	1								6	17

(1) SMR CODE	(2) FEDERAL STOCK NUMBER	(3) DESCRIPTION REF NUMBER & MFR CODE	USABLE ON CODE	(4) UNIT OF MEAS	(5) QTY INC IN UNIT	(6) 30-DAY DS MAINT ALLOWANCE (a) 1-20	(b) 21-50	(c) 51-100	(7) 30-DAY GS MAINT ALLOWANCE (a) 1-20	(b) 21-50	(c) 51-100	(8) 1-YR ALW PER 100 EQUIP CNTGY	(9) ILLUSTRATION (a) FIG. NO.	(b) ITEM NO.
PO		SCREW, MACHINE, PAN HEAD: CLAMP MTG MS35207-264 (96906)		EA	2	*	*	*	*	*	*	*	7	1
PO		NUT, BLIND, RIVET MS27130-14K (96906)		EA	2	*	*	*	*	*	*	*	7	2
PO		CLAMP LOOP PLASTIC: SENSING BULB MTG MS25281-F6 (96906)		EA	2	*	*	*	*	*	*	*	7	3
PO		SCREW, MACHINE, PAN HEAD: CLAMP MTG MS35207-264 (96906)		EA	2	*	*	*	*	*	*	*	7	4
PO		NUT, BLIND, RIVET MS27130-20K (96906)		EA	2	*	*	*	*	*	*	*	7	5
PO		CLAMP, BULB, THERMOSTAT 13211E4650 (06534)		EA	2	*	*	*	*	*	*	*	7	6
PO		NUT, SELF-LOCKING: POWER RELAY MTG MS21044-N04 (96906)		EA	1	*	*	*	*	*	*	*	7	7
PO	5945-835-9079	RELAY, POWER 219BBX134 (78290)		EA	1	*	*	*	*	*	*	*	7	8
O	5961-978-7660	RECTIFIER, JUNCTION, SILICON 1N1695 (03538)		EA	1	*	*	*	*	*	*	*	7	9
IO		ASSEMBLY, WIRE 13211E4757-4 (06534) MANUFACTURE FROM: WIRE, ELECTRICAL, 4 in. required MS25190-A-16 (96906) TERMINAL, LUG, 2 ea MS25036-53 (96906) MARKER, IDENTIFICATION, 1 ea MIL-M-2210 (81349)		EA	1								7	10
PO		NUT, PLAIN, HEXAGON MS35649-82 (96906)		EA	2	*	*	*	*	*	*	*	7	11
PO		WASHER, LOCK, SPLIT, HELICAL MS35338-42 (96906)		EA	2	*	*	*	*	*	*	*	7	12
PO		SCREW, MACHINE, PAN HEAD: RECEPTACLE MTG MS35206-249 (96906)		EA	2	*	*	*	*	*	*	*	7	13
PF		RECEPTACLE, RELAY 27390 (78290)		EA	1	*	*	*	*	*	*	*	7	14
PO		SCREW, MACHINE, PAN HEAD: CAPACITOR BRACKET MTG MS35206-245 (96906)		EA	2	*	*	*	*	*	*	*	7	15
PO		WASHER, LOCK, SPLIT, HELICAL MS35338-42 (96906)		EA	2	*	*	*	*	*	*	*	7	16
PO		NUT, BLIND, RIVET MS27130-14K (96906)		EA	2	*	*	*	*	*	*	*	7	17
X2O		BRACKET: CAPACITOR MTG 13211E4739 (06534)		EA	1								7	18
PO	5910-936-1282	CAPACITOR, MOTOR, RUN 49F6443 (01002)		EA	1	*	*	*	*	*	*	*	7	19

(1) SMR CODE	(2) FEDERAL STOCK NUMBER	(3) DESCRIPTION REF NUMBER & MFR CODE	USABLE ON CODE	(4) UNIT OF MEAS	(5) QTY INC IN UNIT	(6) 30-DAY DS MAINT ALLOWANCE (a) 1-20	(b) 21-50	(c) 51-100	(7) 30-DAY GS MAINT ALLOWANCE (a) 1-20	(b) 21-50	(c) 51-100	(8) 1-YR ALW PER 100 EQUIP CNTGY	(9) ILLUSTRATION (a) FIG. NO.	(b) ITEM NO.
PO		GROMMET, RUBBER MS35489-14 (96906)		EA	1	*	*	*	*	*	*	*	7	20
PO		SCREW, MACHINE, FLAT HEAD: FAN GUARD MTG MS35191-273 (96906)		EA	4	*	*	*	*	*	*	*	7	21
PO		NUT, BLIND, RIVET MS27130-20K (96906)		EA	4	*	*	*	*	*	*	*	7	22
PO		RIVET, SOLID: RECEPTACLE MTG MS20426A3-3 (96906)		EA	8	*	*	*	*	*	*	*	7	23
PO	5325-788-5635	RECEPTACLE 82-35-302-15 (94222)		EA	4	*	*	*	*	*	*	*	7	24
X2O		GUARD, FAN 13211E4716 (06534)		EA	1								7	25
		GROUP 05 - WIRING HARNESS, EVAPORATOR SECTION												
PO		SCREW, MACHINE, PAN HEAD: CONNECTOR MTG MS35206-217 (96906)		EA	4	*	*	*	*	*	*	*	8	1
PO		NUT, SELF-LOCKING: CONNECTOR MTG MS21044-N04 (96906)		EA	4	*	*	*	*	*	*	*	8	
P2O	4130-840-8619	WIRING HARNESS 13211E4747 (06534)		EA	1	*	*	*	*	*	*	*	8	3
X2O		STRAP, CABLE, ADJUSTABLE MS18034-4-2 (96906)		EA	27								8	4
PO	5935-836-0173	CONNECTOR, RECEPTACLE MS3102R-22-19P (96906)		EA	1	*	*	*	*	*	*	*	8	5
PO		TERMINAL, LUG MS25036-6 (96906)		EA	33	*	*	*	*	*	*	*	8	6
PO		TERMINAL, LUG MS25036-8 (96906)		EA	1	*	*	*	*	*	*	*	8	7
PO		TERMINAL, LUG MS25036-53 (96906)		EA	6	*	*	*	*	*	*	*	8	8
PO		WIRE, ELECTRICAL MS25190-A-16 (96906)		FT	65	*	*	*	*	*	*	*	8	9
		GROUP 06 - EXPANSION VALVE AND TUBING												
X2F	4130-964-9157	DISTRIBUTOR 1620-2-3/16-1N (78462)		EA	1								9	1
MF		ADAPTER, DISTRIBUTOR 13211E4640 (06534) MANUFACTURE FROM: TUBE, COPPER, 1 ft required ASTM-B-280 (46783)		EA	1								9	2

(1) SMR CODE	(2) FEDERAL STOCK NUMBER	(3) DESCRIPTION REF NUMBER & MFR CODE	USABLE ON CODE	(4) UNIT OF MEAS	(5) QTY INC IN UNIT	(6) 30-DAY DS MAINT ALLOWANCE (a) 1-20	(b) 21-50	(c) 51-100	(7) 30-DAY GS MAINT ALLOWANCE (a) 1-20	(b) 21-50	(c) 51-100	(8) 1-YR ALW PER 100 EQUIP CNTGY	(9) ILLUSTRATION (a) FIG. NO.	(b) ITEM NO.
		NUT, FLARE, 1 ea FSN 4730-189-2741												
		REDUCER, TUBE, 1 ea MS35923-5 (96906)												
MF		LINE EQUALIZER: 13211E4651 (06534) MANUFACTURE FROM:		EA	1								9	3
		TUBE, COPPER, 1 ft required ASTM-B-280 (46783)												
		NUT, FLARE, 1 ea FSN 4730-189-2737												
MF		LINE, SUCTION 13211E4720 (06534) MANUFACTURE FROM:		EA	1								9	4
		TUBE, COPPER, 2 ft required ASTM-B-280 (46783)												
		TUBE, ELBOW, 1 ea MS35928-4 (96906)												
		TAPE, PRESSURE SENSATIVE, 2 ft required MIL-T-22085 (81349)												
		INSULATION, THERMAL, FLEXIBLE, 2 ft required 204 (03938)												
MF		LINE, LIQUID 13211E4607 (06534) MANUFACTURE FROM:		EA	1								9	5
		NUT, FLARE, 1 ea FSN 4730-189-2739												
		TUBE, COPPER, 1 ft required FSN 4710-203-3172												
		ELBOW, TUBE, 1 ea MS35928-3 (96906)												
PF	4820-995-9014	VALVE, EXPANSION CFE-1/2-G-BP/20 (78462)		EA	1	*	*	*	*	*	*	*	9	6
X2F		ADAPTER, TUBING: LIQUID LINE 202208-6-8 (00624)		EA	1								9	7
PO	5330-727-1286	GASKET 22546-17 (00624)		EA	1	*	*	*	*	*	*	*	9	8
PF	4820-774-6575	VALVE, POPPET: LIQUID LINE 5400-S20-8 (00624)		EA	1	*	*	*	*	*	*	*	9	9
PO		NUT, JAM: LIQUID LINE 5400-53-8 (00624)		EA	1	*	*	*	*	*	*	*	9	10
PF	4730-613-9863	COUPLING, HALF: LIQUID LINE 5400-S2-8 (00624)		EA	1	*	*	*	*	*	*	*	9	11
PF	5330-805-2408	GASKET 22008-8 (00624)		EA	1	*	*	*	*	*	*	*	9	12
X2F		ADAPTER, TUBING: SUCTION LINE 202208-8-8 (00624)		EA	1								9	13

(1) SMR CODE	(2) FEDERAL STOCK NUMBER	(3) DESCRIPTION REF NUMBER & MFR CODE	USABLE ON CODE	(4) UNIT OF MEAS	(5) QTY INC IN UNIT	(6) 30-DAY DS MAINT ALLOWANCE (a) 1-20	(b) 21-50	(c) 51-100	(7) 30-DAY GS MAINT ALLOWANCE (a) 1-20	(b) 21-50	(c) 51-100	(8) 1-YR ALW PER 100 EQUIP CNTGY	(9) ILLUSTRATION (a) FIG. NO.	(b) ITEM NO.
PO	5330-727-1286	GASKET 22546-17 (00624)		EA	1	*	*	*	*	*	*	*	9	14
PF	4820-774-6575	VALVE, POPPET: SUCTION LINE 5400-S20-8 (00624)		EA	1								9	15
PO		NUT, JAM: SUCTION LINE 5400-53-8 (00624)		EA	1	*	*	*	*	*	*	*	9	16
PF	4730-613-9863	COUPLING, HALF: LIQUID LINE 5400-S2-8 (00624)		EA	1	*	*	*	*	*	*	*	9	17
PF	5330-805-2408	GASKET 22008-8 (00624)		EA	1								9	18
		GROUP 07 - EVAPORATOR AND HEATER COILS AND AIR FILTER												
PO	4130-987-5587	FILTER, AIR C39034-1 (06534)		EA	1	*	*	*	*	*	*	*	10	1
PO		INSULATION: EVAPORATOR COIL 1/4 IN.THK X 1-1/2 IN.W X 12 IN.LG MIL-I-16562 (81349)		IN.	12	*	*	*	*	*	*	*	10	2
MO		WIRE LEAD 13211E4757-2 (06534) MANUFACTURE FROM: WIRE, ELECTRICAL: 2-1/2 in. required MS25190-A-16 (96906) TERMINAL, LUG, 2 ea MS25036-53 (96906)		EA	1								10	3
MO		WIRE LEAD 13211E4752-3 (06534) MANUFACTURE FROM: WIRE, ELECTRICAL, 2-1/2 in. required MS25190-A-16 (96906) TERMINAL, LUG, 2 ea MS25036-53 (96906)		EA	1								10	4
MO		WIRE LEAD 13211E4757-1 (06534) MANUFACTURE FROM: WIRE, ELECTRICAL, 2-1/2 in. required MS25190-A-16 (96906) TERMINAL, LUG, 2 ea MS25036-53 (96906)		EA	1								10	5
PO		SCREW, MACHINE, PAN HEAD: THERMOSTAT MTG MS35206-233 (96906)		EA	1	*	*	*	*	*	*	*	10	6
PO		NUT, SELF-LOCKING: THERMOSTAT MTG MS21044-N06 (96906)		EA	1	*	*	*	*	*	*	*	10	7
PO	4130-733-7842	THERMOSTAT A22-110F (44218)		EA	1	*	*	*	*	*	*	*	10	8
PF		SCREW, MACHINE, PAN HEAD: HEATER MTG MS35207-264 (96906)		EA	4	*	*	*	*	*	*	*	10	9

(1) SMR CODE	(2) FEDERAL STOCK NUMBER	(3) DESCRIPTION REF NUMBER & MFR CODE	USABLE ON CODE	(4) UNIT OF MEAS	(5) QTY INC IN UNIT	(6) 30-DAY DS MAINT ALLOWANCE (a) 1-20	(b) 21-50	(c) 51-100	(7) 30-DAY GS MAINT ALLOWANCE (a) 1-20	(b) 21-50	(c) 51-100	(8) 1-YR ALW PER 100 EQUIP CNTGY	(9) ILLUSTRATION (a) FIG. NO.	(b) ITEM NO.
PF		WASHER, LOCK, SPLIT, HEATER MS35338-43 (96906)		EA	4	*	*	*	*	*	*	*	10	10
PF		COIL, HEATER H-713C (94629)		EA	1	*	*	*	*	*	*	*	10	11
PF		SCREW, MACHINE, FLAT HEAD: EVAPORATOR COIL MTG MS35191-273 (96906)		EA	4	*	*	*	*	*	*	*	10	12
PF		RIVET, SOLID COUNTERSUNK HEAD: NUT,SELF-LOCKING MTG MS20426AD3-5 (96906)		EA		*	*	*	*	*	*	*	10	13
PF		NUT, SELF-LOCKING, PLATE, TWO LUG NAS1031-P3 (80205)		EA	8	*	*	*	*	*	*	*	10	14
PF		COIL, EVAPORATOR DE3-10-11-3/4-12 (00249)		EA	1	*	*	*	*	*	*	*	10	15
		GROUP 08 - CONDENSATE PAN AND FRAME, EVAPORATOR SECTION												
PO		SCREW, MACHINE, FLAT HEAD: CONDENSATE PAN MTG MS35191-273 (96906)		EA	4	*	*	*	*	*	*	*	11	1
PO		NUT, BLIND RIVET MS27130-20K (96906)		EA	4	*	*	*	*	*	*	*	11	2
X2O		CONDENSATE PAN 13211E4611 (06534)		EA	1								11	3
PO		RIVET: RECEPTACLE MTG MS20426A3-5 (96906)		EA	80	*	*	*	*	*	*	*	11	4
PO	5325-788-5635	RECEPTACLE 82-35-302-15 (94222)		EA	40	*	*	*	*	*	*	*	11	5
PO		NUT, BLIND RIVET MS27130-20K (96906)		EA	18	*	*	*	*	*	*	*	11	6
X2F		FRAME, EVAPORATOR 13211E4756 (06534)		EA	1								11	7
		GROUP 09 - COVER AND PANELS, CONDENSER SECTION												
PO		SCREW, MACHINE, PAN HEAD: BRACKET MTG MS35207-204 (96906)		EA	5	*	*	*	*	*	*	*	12	1
X1		BRACKET, MOUNTING 13211E4755 (06534)		EA	1								12	2
PO		SCREW, MACHINE, PAN HEAD: COVER MTG MS35207-264 (96906)		EA	2	*	*	*	*	*	*	*	12	3
P2O		COVER, CONNECTOR 13211E4681 (06534)		EA	1	*	*	*	*	*	*	*	12	4

(1) SMR CODE	(2) FEDERAL STOCK NUMBER	(3) DESCRIPTION REF NUMBER & MFR CODE	USABLE ON CODE	(4) UNIT OF MEAS	(5) QTY INC IN UNIT	(6) 30-DAY DS MAINT ALLOWANCE (a) 1-20	(b) 21-50	(c) 51-100	(7) 30-DAY GS MAINT ALLOWANCE (a) 1-20	(b) 21-50	(c) 51-100	(8) 1-YR ALW PER 100 EQUIP CNTGY	(9) ILLUSTRATION (a) FIG. NO.	(b) ITEM NO.
PO	5310-845-5472	RING, RETAINER, FASTENER 82-32-101-17 (94222)		EA	4	*	*	*	*	*	*	*	12	5
PO	4120-963-0221	STUD, FASTENER 82-11-280-16 (94222)		EA	4	*	*	*	*	*	*	*	12	6
X2O		GASKET: PANEL, RIGHT, UPPER 5/32 IN.THK X 1/4 IN.W X 39 IN.LG MIL-R-6130 (81349)		IN.	39								12	7
X2O		PANEL, RIGHT, UPPER 13211E4712 (06534)		EA	1								12	8
PO	5310-845-5472	RING, RETAINER, FASTENER 82-32-101-17 (94222)		EA	3	*	*	*	*	*	*	*	12	9
PO	4120-963-0221	STUD, FASTENER 82-11-280-16 (94222)		EA	3	*	*	*	*	*	*	*	12	10
PO		GASKET: PANEL, RIGHT, LOWER 5/32 IN.THK X 1/4 IN.W X 22 IN.LG MIL-R-6130 (81349)		IN.	22	*	*	*	*	*	*	*	12	11
X2O		PANEL, RIGHT, LOWER 13211E4714 (06534)		EA	1								12	12
PO		SCREW, MACHINE, PAN HEAD: COVER MTG MS35206-230 (96906)		EA	1	*	*	*	*	*	*	*	12	13
PO		WASHER, LOCK, SPLIT, HELICAL MS35338-41 (96906)		EA	1	*	*	*	*	*	*	*	12	14
PO		WASHER, FLAT AN960-6 (88044)		EA	1	*	*	*	*	*	*	*	12	15
X2O		COVER, ACCESS 13211E9786 (06534)		EA	1								12	16
PO		NUT, CLINCH 74-11-106-13 (24248)		EA	1	*	*	*	*	*	*	*	12	17
PO		GASKET: PANEL, TOP 5/32 IN.THK X 1/4 IN.W X 42 IN.LG MIL-R-6130 (81349)		IN.	42	*	*	*	*	*	*	*	12	18
PO		RIVET, SOLID: IDENTIFICATION PLATE MTG MS20470A4-4 (96906)		EA	4	*	*	*	*	*	*	*	12	19
X2O		PLATE, IDENTIFICATION MIL-P-514 (81349)		EA	1								12	20
PO	5310-845-5472	RING, RETAINER, FASTENER 82-32-101-17 (94222)		EA	6	*	*	*	*	*	*	*	12	21
PO	4120-963-0221	STUD, FASTENER 82-11-280-16 (94222)		EA	6	*	*	*	*	*	*	*	12	22
PO		PANEL, TOP 13211E4753 (06534)		EA	1	*	*	*	*	*	*	*	12	23
PO	5310-845-5472	RING, RETAINER, FASTENER 82-32-101-17 (94222)		EA	3	*	*	*	*	*	*	*	12	24

(1) SMR CODE	(2) FEDERAL STOCK NUMBER	(3) DESCRIPTION REF NUMBER & MFR CODE	USABLE ON CODE	(4) UNIT OF MEAS	(5) QTY INC IN UNIT	(6) 30-DAY DS MAINT ALLOWANCE (a) 1-20	(b) 21-50	(c) 51-100	(7) 30-DAY GS MAINT ALLOWANCE (a) 1-20	(b) 21-50	(c) 51-100	(8) 1-YR ALW PER 100 EQUIP CNTGY	(9) ILLUSTRATION (a) FIG. NO.	(b) ITEM NO.
PO	4120-963-0221	STUD, FASTENER 82-11-280-16 (94222)		EA	3	*	*	*	*	*	*	*	12	25
X20		PANEL, LOWER, FRONT 13211E4689 (06534)		EA	1								12	26
PO		SCREW, MACHINE, PAN HEAD: PANEL MTG MS35207-264 (96906)		EA	4	*	*	*	*	*	*	*	12	27
X20		PANEL, UPPER, FRONT 13211E4767 (06534)		EA	1								12	28
PO		SCREW, MACHINE, PAN HEAD: BRACKET MTG MS35207-264 (96906)		EA	6	*	*	*	*	*	*	*	13	1
X1		BRACKET, MTG 13211E4731 (06534)		EA	1								13	2
PO	5310-845-5472	RING, RETAINER, FASTENER 82-32-101-17 (94222)		EA	6	*	*	*	*	*	*	*	13	3
PO	4120-963-0221	STUD, FASTENER 82-11-280-16 (96222)		EA	6	*	*	*	*	*	*	*	13	4
PO		GASKET: PANEL, LEFT SIDE 5/32 IN.THK X 1/4 IN.W X 52 IN.LG MIL-R-6130 (81349)		IN.	52	*	*	*	*	*	*	*	13	5
X20		PANEL, LEFT SIDE 13211E4715 (06534)		EA	1								13	6
PO	5310-845-5472	RING, RETAINER, FASTENER 82-32-101-17 (94222)		EA	12	*	*	*	*	*	*	*	13	7
X20	4120-963-0221	STUD, FASTENER 82-11-280-16 (94222)		EA	12								13	8
PO		GASKET: PANEL, REAR 5/32 IN.THK X 1/4 IN.W X 73 IN.LG MIL-R-6130 (81349)		IN.	73	*	*	*	*	*	*	*	13	9
PO		RIVET, SOLID: INFORMATION PLATE MS20470AD4-4 (96906)		EA	4	*	*	*	*	*	*	*	13	10
X20		INFORMATION PLATE, WIRING 13211E4746 (06534)		EA	1								13	11
X20		PANEL, REAR 13211E4745 (06534)		EA	1								13	12
PO	5310-845-5472	RING, RETAINER, FASTENER 82-32-101-17 (94222)		EA	4	*	*	*	*	*	*	*	13	13
PO	4120-963-0221	STUD, FASTENER 82-11-280-16 (94222)		EA	4	*	*	*	*	*	*	*	13	14
X20		PANEL, BOTTOM 13211E4713 (06534)		EA	1								13	15
		GROUP 10 - WIRING HARNESS, CONDENSER SECTION												
PO		SCREW, MACHINE, PAN HEAD: CLAMP MTG MS35207-264 (96906)		EA	1	*	*	*	*	*	*	*	14	1

(1) SMR CODE	(2) FEDERAL STOCK NUMBER	(3) DESCRIPTION REF NUMBER & MFR CODE	USABLE ON CODE	(4) UNIT OF MEAS	(5) QTY INC IN UNIT	(6) 30-DAY DS MAINT ALLOWANCE (a) 1-20	(b) 21-50	(c) 51-100	(7) 30-DAY GS MAINT ALLOWANCE (a) 1-20	(b) 21-50	(c) 51-100	(8) 1-YR ALW PER 100 EQUIP CNTGY	(9) ILLUSTRATION (a) FIG. NO.	(b) ITEM NO.
PO		CLAMP, LOOP, CUSHIONED MS21919DG8 (96906)		EA	1	*	*	*	*	*	*	*	14	2
PO		SCREW , MACHINE, PAN HEAD: CONNECTOR MTG MS35207-217 (96906)		EA	8	*	*	*	*	*	*	*	14	3
PO		NUT, SELF-LOCKING, HEXAGON MS21044-N04 (96906)		EA	8	*	*	*	*	*	*	*	14	4
PO		SCREW, MACHINE, FLAT HEAD: CONNECTOR BRACKET MTG MS35191-273 (96906)		EA	2	*	*	*	*	*	*	*	14	5
P2O		WIRING HARNESS 13217E1989 (06534)		EA	1	*	*	*	*	*	*	*	14	6
X2O		STRAP, CABLE, ADJUSTABLE MS18034-4-2 (96906)		EA	20								14	7
P2O		CONNECTOR MS3102R-22-19S (96906)		EA	1	*	*	*	*	*	*	*	14	8
P2O		CONNECTOR MS3102R-18-4P (96906)		EA	1	*	*	*	*	*	*	*	14	9
PO		SCREW, MACHINE, PAN HEAD: CONNECTOR MTG MS35206-217 (96906)		EA	4	*	*	*	*	*	*	*	14	10
PO		NUT, SELF-LOCKING: CONNECTOR MTG MS21044-N04 (96906)		EA	4	*	*	*	*	*	*	*	14	11
P2O		CONNECTOR, 90° 13211E4742 (06534)		EA	1	*	*	*	*	*	*	*	14	12
X2O		PLATE: CONNECTOR MTG 13211E4748 (06534)		EA	1								14	13
PO		TERMINAL, WIRE, FLAG TYPE 41532 (00779)		EA	9	*	*	*	*	*	*	*	14	14
PO		TERMINAL, LUG, CRIMP STYLE MS25036-106 (96906)		EA	24	*	*	*	*	*	*	*	14	15
P2O		WIRE, ELECTRICAL, 65 ft required MS25190-A-16 (96906)		FT	65								14	16
		GROUP 11 - CONDENSER FAN, FAN MOTOR, PRESSURE SWITCH, FUSE AND RECTIFIER												
PO		SCREW, MACHINE, PAN HEAD: MOTOR MTG MS35206-243 (96906)		EA	2	*	*	*	*	*	*	*	15	1
PO		WASHER, LOCK, SPLIT, HELICAL: MOTOR MTG MS35338-42 (96906)		EA	2	*	*	*	*	*	*	*	15	2
PO		SCREW, MACHINE, FLAT HEAD: BRACKET MTG MS35191-273 (96906)		EA	1	*	*	*	*	*	*	*	15	3
PO		NUT, BLIND, RIVET MS27130-27K (96906)		EA	1	*	*	*	*	*	*	*	15	4
X2O		BRACKET: MOTOR MTG 13211E4728 (06534)		EA	1								15	5

(1) SMR CODE	(2) FEDERAL STOCK NUMBER	(3) DESCRIPTION REF NUMBER & MFR CODE	USABLE ON CODE	(4) UNIT OF MEAS	(5) QTY INC IN UNIT	(6) 30-DAY DS MAINT ALLOWANCE (a) 1-20	(b) 21-50	(c) 51-100	(7) 30-DAY GS MAINT ALLOWANCE (a) 1-20	(b) 21-50	(c) 51-100	(8) 1-YR ALW PER 100 EQUIP CNTGY	(9) ILLUSTRATION (a) FIG. NO.	(b) ITEM NO.
PO		SCREW, MACHINE, FLAT HEAD: BRACKET MTG MS35191-273 (96906)		EA	1	*	*	*	*	*	*	*	15	6
PO		NUT, BLIND, RIVET MS27130-22K (96906)		EA	1	*	*	*	*	*	*	*	15	7
PO		SCREW, MACHINE, PAN HEAD: MOTOR MTG MS35206-243 (96906)		EA	2	*	*	*	*	*	*	*	15	8
PO		WASHER, LOCK, SPLIT, HELICAL: MOTOR MTG MS35338-42 (96906)		EA	2	*	*	*	*	*	*	*	15	9
X2O		BRACKET: MOTOR MTG 13211E4730 (06534)		EA	1								15	10
PO		SCREW, MACHINE, FLAT HEAD MS35191-273 (96906)		EA	2	*	*	*	*	*	*	*	15	11
PO		NUT, BLIND, RIVET MS27130-22K (96906)		EA	2	*	*	*	*	*	*	*	15	12
PO		SCREW, MACHINE, PAN HEAD: MOTOR MTG MS35206-243 (96906)		EA	4	*	*	*	*	*	*	*	15	13
PO		WASHER, LOCK, SPLIT, HELICAL: MOTOR MTG MS35338-42 (96906)		EA	4	*	*	*	*	*	*	*	15	14
X2O		BRACKET: MOTOR MTG 13211E4729 (06534)		EA	2								15	15
PO		SCREW, SET: CONDENSER FAN MTG 15231-8 (60380)		EA	1	*	*	*	*	*	*	*	15	16
P2O		FAN, CONDENSER P-1020-4 (60380)		EA	1	*	*	*	*	*	*	*	15	17
PO	6105-935-0376	MOTOR, CONDENSER, FAN 3715-6 (64731)		EA	1	*	*	*	*	*	*	*	15	18
PO		SCREW, MACHINE, PAN HEAD: SWITCH MTG MS35206-230 (96906)		EA	1	*	*	*	*	*	*	*	15	19
PO		WASHER, LOCK, SPRING, HELICAL: SWITCH MTG MS35338-41 (96906)		EA	2	*	*	*	*	*	*	*	15	20
PO		SCREW, MACHINE, FLAT HEAD: SWITCH BRACKET MTG MS35190-254 (96906)		EA	2	*	*	*	*	*	*	*	15	21
PO		SWITCH, PRESSURE 210AP40AN-4401 (92578)		EA	1	*	*	*	*	*	*	*	15	22
X2O		BRACKET: SWITCH MTG 13216E9787 (06534)		EA	1								15	23
PO		SCREW, MACHINE, PAN HEAD: RECTIFIER MTG MS35206-230 (96906)		EA	2	*	*	*	*	*	*	*	15	24
P2O		NUT, SELF-LOCKING: RECTIFIER MS21045-06 (96906)		EA	2								15	25
PO		WIRE, ELECTRICAL, 3 in. required MS25190-A-16 (96906)		IN.	3	*	*	*	*	*	*	*	15	26
PO		TERMINAL LUG MS25036-53 (96906)		EA	1	*	*	*	*	*	*	*	15	27

(1) SMR CODE	(2) FEDERAL STOCK NUMBER	(3) DESCRIPTION REF NUMBER & MFR CODE	USABLE ON CODE	(4) UNIT OF MEAS	(5) QTY INC IN UNIT	(6) 30-DAY DS MAINT ALLOWANCE (a) 1-20	(b) 21-50	(c) 51-100	(7) 30-DAY GS MAINT ALLOWANCE (a) 1-20	(b) 21-50	(c) 51-100	(8) 1-YR ALW PER 100 EQUIP CNTGY	(9) ILLUSTRATION (a) FIG. NO.	(b) ITEM NO.
PO		RECTIFIER B391-1 (92310)		EA	1	*	*	*	*	*	*	*	15	28
PO	5920-280-8344	FUSE, CARTRIDGE FO250V 1/2 A (71400)		EA	1	*	*	*	*	*	*	*	15	29
PO		NUT, PLAIN, HEXAGON: FUSE HOLDER MS25082-10 (96906)		EA	1	*	*	*	*	*	*	*	15	30
X2O		HOLDER: FUSE FHL17G (71400)		EA	1								15	31
PO		SCREW, MACHINE, FLAT HEAD: BRACKET MTG MS35190-236 (96906)		EA	2	*	*	*	*	*	*	*	15	32
PO		NUT, SELF-LOCKING MS21045-06 (96906)		EA	2	*	*	*	*	*	*	*	15	33
X2O		BRACKET: FUSE 13211E4677 (06534)		EA	1								15	34
		GROUP 12 - REFRIGERATION COMPONENTS												
PF		NUT, PLAIN, CAP MS24679-108 (96906)		EA	1								16	1
MF		LINE: CHARGING 13211E4752 (06534) MANUFACTURE FROM: TUBE, COPPER, 1 ft required ASTM-B-280 (46783) NUT, FLARE, 1 ea FSN4730-189-2741 ADAPTER, STRAIGHT, 1 ea MS35919-2-4 (96906)		EA	1								16	2
MF		LINE: COMPRESSOR 13211E4704 (06534) MANUFACTURE FROM: TUBE, COPPER, 1 ft required ASTM-B-280 (46783) NUT, FLARE, 1 ea FSN4730-189-2741 ELBOW, TUBE, 2 ea MS35917-4 (96906)		EA	1								16	3
MF		LINE: COMPRESSOR INLET 13211E4763 (06534) MANUFACTURE FROM: TUBE, COPPER, 2 ft required ASTM-B-280 (46783) NUT, FLARE, 1 ea FSN4730-189-2741		EA	1								16	4

(1) SMR CODE	(2) FEDERAL STOCK NUMBER	(3) DESCRIPTION REF NUMBER & MFR CODE	USABLE ON CODE	(4) UNIT OF MEAS	(5) QTY INC IN UNIT	(6) 30-DAY DS MAINT ALLOWANCE (a) 1-20	(b) 21-50	(c) 51-100	(7) 30-DAY GS MAINT ALLOWANCE (a) 1-20	(b) 21-50	(c) 51-100	(8) 1-YR ALW PER 100 EQUIP CNTGY	(9) ILLUSTRATION (a) FIG. NO.	(b) ITEM NO.
PO		SCREW, MACHINE, PAN HEAD: VALVE MTG MS35207-244 (96906)		EA	2	*	*	*	*	*	*	*	16	5
PO		WASHER, FLAT, ROUND: VALVE MTG MS27183-7 (96906)		EA	2	*	*	*	*	*	*	*	16	6
P2F		VALVE, LINE, SHUT-OFF A-13612 (41947)		EA	1	*	*	*	*	*	*	*	16	7
PO		CAP: SUCTION, VALVE 7618-46 (41947)		EA	1	*	*	*	*	*	*	*	16	8
PO		SCREW, MACHINE, PAN HEAD: SPACER MTG MS35206-243 (96906)		EA	2	*	*	*	*	*	*	*	16	9
PO		NUT, SELF-LOCKING: SPACER MTG MS21044-N08 (96906)		EA	2	*	*	*	*	*	*	*	16	10
X2O		SPACER: VALVE MTG 13216E5127 (06534)		EA	1								16	11
X2F		ADAPTER, TUBING 202208-8-8 (00624)		EA	1								16	12
PF	5330-727-1286	GASKET 22546-17 (00624)		EA	1	*	*	*	*	*	*	*	16	13
PF	4820-774-6575	ASSEMBLY, VALVE, POPPET 5400-S20-8 (00624)		EA	1	*	*	*	*	*	*	*	16	14
PO		NUT, JAM: COMPRESSOR, INLET LINE 5400-53-8 (00624)		EA	1	*	*	*	*	*	*	*	16	15
PF	4730-613-9863	COUPLING, HALF 5400-S2-8 (00624)		EA	1	*	*	*	*	*	*	*	16	16
PF	5330-805-2408	GASKET 22008-8 (00624)		EA	1	*	*	*	*	*	*	*	16	17
MF		LINE: COMPRESSOR, DISCHARGE 13211E4699 (06534) MANUFACTURE FROM: TUBE, COPPER, 2-1/2 ft required ASTM-B-280 (46783) TEE, COPPER, 1 ea W-40324 (41947)		EA	1								16	18
PO		NUT, PLAIN, HEXAGON MS51967-5 (96906)		EA	1	*	*	*	*	*	*	*	16	19
PO		WASHER, LOCK: SPRING, HELICAL MS35338-45 (96906)		EA	1	*	*	*	*	*	*	*	16	20
PO		WASHER, SHOULDER 13211E4764 (06534)		EA	1	*	*	*	*	*	*	*	16	21
PO		SCREW, CAP: HEXAGON HEAD MS90725-32 (96906)		EA	1	*	*	*	*	*	*	*	16	22
PO		SCREW, MACHINE, FLAT HEAD: ANGLE MTG MS35191-273 (96906)		EA	2	*	*	*	*	*	*	*	16	23
PO		NUT, BLIND, RIVET MS27130-22 (96906)		EA	2	*	*	*	*	*	*	*	16	24
PF		ANGLE, VALVE MTG 13211E4692 (06534)		EA	1	*	*	*	*	*	*	*	16	25

(1) SMR CODE	(2) FEDERAL STOCK NUMBER	(3) DESCRIPTION REF NUMBER & MFR CODE	USABLE ON CODE	(4) UNIT OF MEAS	(5) QTY INC IN UNIT	(6) 30-DAY DS MAINT ALLOWANCE (a) 1-20	(b) 21-50	(c) 51-100	(7) 30-DAY GS MAINT ALLOWANCE (a) 1-20	(b) 21-50	(c) 51-100	(8) 1-YR ALW PER 100 EQUIP CNTGY	(9) ILLUSTRATION (a) FIG. NO.	(b) ITEM NO.
PO		SCREW, MACHINE, FLAT HEAD: COMPRESSOR MTG MS35190-305 (96906)		EA	4	*	*	*	*	*	*	*	17	1
PO		WASHER, SHOULDER: COMPRESSOR MTG 13211E4764 (06534)		EA	4	*	*	*	*	*	*	*	17	2
PO		WASHER, LOCK, SPLIT, HELICAL: COMPRESSOR MTG MS35338-45 (96906)		EA	4	*	*	*	*	*	*	*	17	3
PO		NUT, PLAIN, HEXAGON MS51967-5 (96906)		EA	4	*	*	*	*	*	*	*	17	4
PF	4130-070-8843	ASSEMBLY, COMPRESSOR MIL-U-6-VAC-610 (64731)		EA	1	*	*	*	*	*	*	*	17	5
X2O	4130-840-8594	LOCKWIRE: OVERLOAD MTG 40577 (59431)		EA	1								17	6
PO	6105-932-2430	OVERLOAD MRA4953 (80602)		EA	1	*	*	*	*	*	*	*	17	7
PO		SCREW, MACHINE, PAN HEAD: STRAP MTG MS35207-264 (96906)		EA	1	*	*	*	*	*	*	*	17	8
PO		NUT, SELF-LOCKING: STRAP MTG MS21044N3 (96906)		EA	1	*	*	*	*	*	*	*	17	9
X2O		STRAP: FILTER-DRIER MTG 13216E9796 (06534)		EA	1								17	10
MF		LINE, RECEIVER, DISCHARGE 13211E4702 (06534) MANUFACTURE FROM: TUBE, COPPER, 1 ft required ASTM-B-280 (46783) NUT, FLARE, 1 ea FSN4730-189-2737 (96906)		EA	1								17	11
PF		FILTER-DRIER MD-015-3 (78897)		EA	1	*	*	*	*	*	*	*	17	12
P2F		SIGHT GLASS, 1 ea FSN4130-733-7845 (78462)		EA	1	*	*	*	*	*	*	*	17	13
MF		LINE, LIQUID 13211E4701 (06534) MANUFACTURE FROM: TUBE, COPPER, 1 ft required ASTM-B-280 (46783) ELBOW, TUBE, 1 ea MS35928-3 (96906) NUT, FLARE, 1 ea FSN4730-189-2737 (96906)		EA	1								17	14
X2F		ADAPTER, TUBING 202208-6-8 (00624)		EA	1								17	15
PF	5330-727-1286	GASKET 22546-17 (00624)		EA	1	*	*	*	*	*	*	*	17	16
PF	4820-774-6575	ASSEMBLY, VALVE, POPPET 5400-S20-8 (00624)		EA	1	*	*	*	*	*	*	*	17	17
PF		NUT, JAM: COMPRESSOR DISCHARGE LINE 5400-53-8 (00624)		EA	1	*	*	*	*	*	*	*	17	18

(1) SMR CODE	(2) FEDERAL STOCK NUMBER	(3) DESCRIPTION REF NUMBER & MFR CODE	USABLE ON CODE	(4) UNIT OF MEAS	(5) QTY INC IN UNIT	(6) 30-DAY DS MAINT ALLOWANCE (a) 1-20	(b) 21-50	(c) 51-100	(7) 30-DAY GS MAINT ALLOWANCE (a) 1-20	(b) 21-50	(c) 51-100	(8) 1-YR ALW PER 100 EQUIP CNTGY	(9) ILLUSTRATION (a) FIG. NO.	(b) ITEM NO.
PF	4720-613-9863	COUPLING: HALF 5400-S2-8 (00624)		EA	1	*	*	*	*	*	*	*	17	19
PO	5330-805-2408	GASKET 22008-8 (00624)		EA	1	*	*	*	*	*	*	*	17	20
PO		SCREW, MACHINE, FLAT HEAD: BRACKET MTG MS35190-254 (96906)		EA	4	*	*	*	*	*	*	*	17	21
PO		NUT, BLIND, RIVET MS27130-14K (96906)		EA	4	*	*	*	*	*	*	*	17	22
X2F		BRACKET: RECEIVER MTG 13211E4674 (06534)		EA	2								17	23
X2F		LINE, RECEIVER 13211E4700 (06534) MANUFACTURE FROM: TUBE, COPPER, 1 ft required ASTM-B-280 (46783)		EA	1								17	24
X2F		RECEIVER P-580 (78857)		EA	1								17	25
P2F	5340-353-5518	PLUG, FUSIBLE A14017 (41947)		EA	1	*	*	*	*	*	*	*	17	26
X2O		CAP, FLARE A4544 (41947)		EA	1								17	27
X2O		CAP, VALVE 7618-46 (41947)		EA	1								17	28
		GROUP 13 - CAPACITORS, FAN SHROUD, CONDENSER COIL AND FRAME												
PO		SCREW, MACHINE, FLAT HEAD: CAPACITOR CLAMP MTG MS35190-254 (96906)		EA	2	*	*	*	*	*	*	*	18	1
PO		NUT, SELF-LOCKING: CAPACITOR CLAMP MTG MS21044-N08 (96906)		EA	2	*	*	*	*	*	*	*	18	2
PO		CLAMP, LOOP, CUSHIONED: CAPACITOR MTG MS21919DG28 (96906)		EA	2	*	*	*	*	*	*	*	18	3
PO		RESISTOR RC42GF153J (81349)		EA	1	*	*	*	*	*	*	*	18	4
PO	5910-933-0597	CAPACITOR: COMPRESSOR START 85508-3 (37942)		EA	1	*	*	*	*	*	*	*	18	5
PO		SCREW, MACHINE, PAN HEAD: BRACKET MTG MS35206-243 (96906)		EA	2	*	*	*	*	*	*	*	18	6
PO		NUT, BLIND, RIVET MS27130-14K (96906)		EA	2	*	*	*	*	*	*	*	18	7

(1) SMR CODE	(2) FEDERAL STOCK NUMBER	(3) DESCRIPTION REF NUMBER & MFR CODE	USABLE ON CODE	(4) UNIT OF MEAS	(5) QTY INC IN UNIT	(6) 30-DAY DS MAINT ALLOWANCE (a) 1-20	(b) 21-50	(c) 51-100	(7) 30-DAY GS MAINT ALLOWANCE (a) 1-20	(b) 21-50	(c) 51-100	(8) 1-YR ALW PER 100 EQUIP CNTGY	(9) ILLUSTRATION (a) FIG. NO.	(b) ITEM NO.
X2O		BRACKET: CAPACITOR MTG 13211E4758 (06534)		EA	1								18	8
PO	5910-934-2783	CAPACITOR: MOTOR RUN 49F6474 (01002)		EA	1	*	*	*	*	*	*	*	18	9
PO		SCREW, MACHINE, FLAT HEAD: BRACKET MTG MS35191-273 (96906)		EA	2	*	*	*	*	*	*	*	18	10
PO		NUT, BLIND, RIVET MS27130-22K (96906)		EA	2	*	*	*	*	*	*	*	18	11
X2O		BRACKET: CAPACITOR SUPPORT 13211E4759 (06534)		EA	1								18	12
PO		SCREW, MACHINE, PAN HEAD: BRACKET MTG MS35206-243 (96906)		EA	2	*	*	*	*	*	*	*	18	13
PO		NUT, BLIND, RIVET MS27130-14K (96906)		EA	2	*	*	*	*	*	*	*	18	14
X2O		BRACKET: CAPACITOR MTG 13211E4739 (06534)		EA	1								18	15
PO	5910-936-1282	CAPACITOR, MOTOR RUN 49F6443 (01002)		EA	1	*	*	*	*	*	*	*	18	16
PO		SCREW, MACHINE, PAN HEAD: RELAY MTG MS35206-243 (96906)		EA	2	*	*	*	*	*	*	*	18	17
PO		RELAY, COMPRESSOR START 6409-30-192 (82647)		EA	1	*	*	*	*	*	*	*	18	18
PO		SCREW, MACHINE, PAN HEAD: BRACKET MTG MS35206-245 (96906)		EA	2	*	*	*	*	*	*	*	18	19
PO		NUT, BLIND, RIVET MS27130-14K (96906)		EA	2	*	*	*	*	*	*	*	18	20
X2O		BRACKET: RELAY MTG 13211E4733 (06534)		EA	1								18	21
PO		SCREW, MACHINE, PAN HEAD: TERMINAL BOARD MTG MS35206-230 (96906)		EA	4	*	*	*	*	*	*	*	18	22
PO		NUT, SELF-LOCKING: TERMINAL BOARD MTG MS21045-06 (96906)		EA	4	*	*	*	*	*	*	*	18	23
X2O		BOARD, TERMINAL 37TB13 (75382)		EA	1								18	24
PO		SCREW, MACHINE, PAN HEAD: SHROUD MTG MS35207-264 (96906)		EA	8	*	*	*	*	*	*	*	18	25
PO		WASHER, LOCK, EXTERNAL TOOTH: SHROUD MTG MS35335-18 (96906)		EA	8	*	*	*	*	*	*	*	18	26
PO		NUT, BLIND, RIVET MS27130-22K (96906)		EA	6	*	*	*	*	*	*	*	18	27

(1) SMR CODE	(2) FEDERAL STOCK NUMBER	(3) DESCRIPTION REF NUMBER & MFR CODE	USABLE ON CODE	(4) UNIT OF MEAS	(5) QTY INC IN UNIT	(6) 30-DAY DS MAINT ALLOWANCE (a) 1-20	(b) 21-50	(c) 51-100	(7) 30-DAY GS MAINT ALLOWANCE (a) 1-20	(b) 21-50	(c) 51-100	(8) 1-YR ALW PER 100 EQUIP CNTGY	(9) ILLUSTRATION (a) FIG. NO.	(b) ITEM NO.
X2O		SHROUD, FAN 13211E4732 (06534)		EA	1								18	28
PO		SCREW, MACHINE, FLAT HEAD: COIL MTG MS35191-273 (96906)		EA	6	*	*	*	*	*	*	*	18	29
PO		NUT, BLIND, RIVET MS27130-22K (96906)		EA	10	*	*	*	*	*	*	*	18	30
PF	4130-895-3068	COIL, CONDENSER C39037-1 (06534)		EA	1	*	*	*	*	*	*	*	18	31
PO		RIVET: RECEPTACLE MTG MS20426A3-5 (96906)		EA	72	*	*	*	*	*	*	*	18	32
PO	5325-788-5635	RECEPTACLE 82-35-302-15 (94222)		EA	36	*	*	*	*	*	*	*	18	33
PO		NUT, BLIND, RIVET MS27130-20K (96906)		EA	22	*	*	*	*	*	*	*	18	34
X2F		FRAME, CONDENSER 13211E4609 (06534)		EA	1								18	35

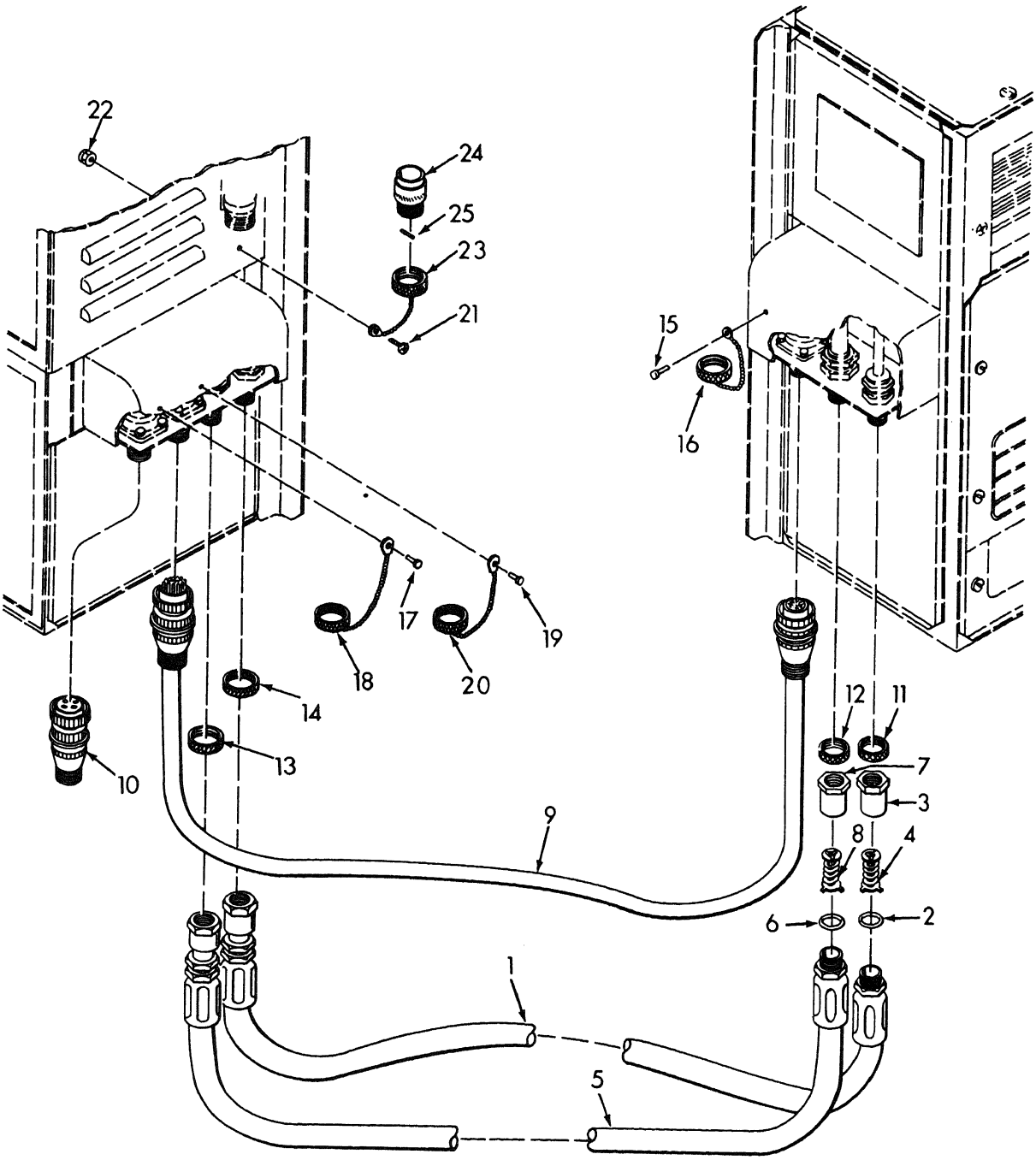

ME 4120-335-24P/1

Figure 1. Electrical Cable and Interconnecting Hoses

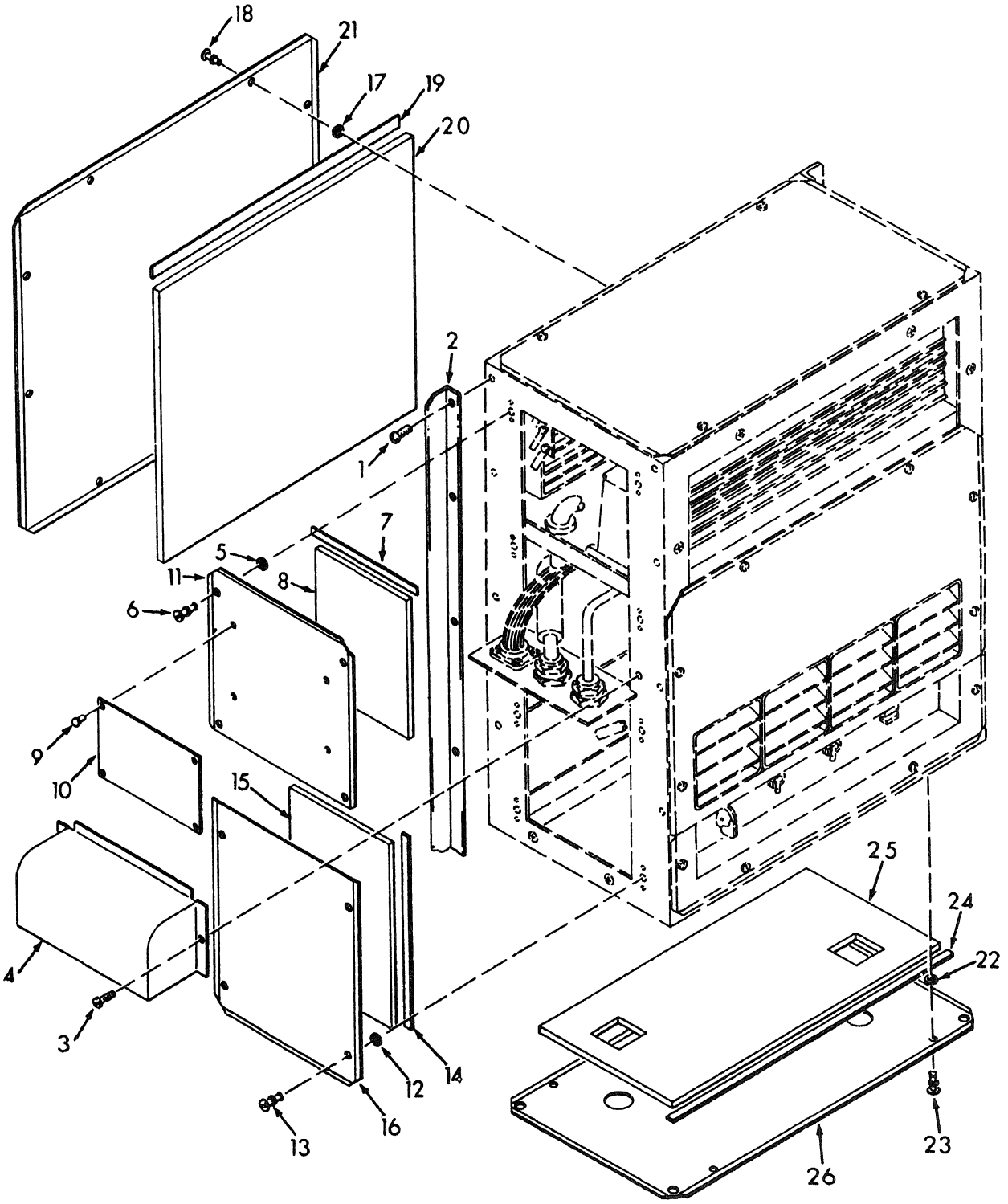

ME 4120-335-24P/2

Figure 2. Mounting Bracket, Connector Cover, Rear, Left and Bottom Panels

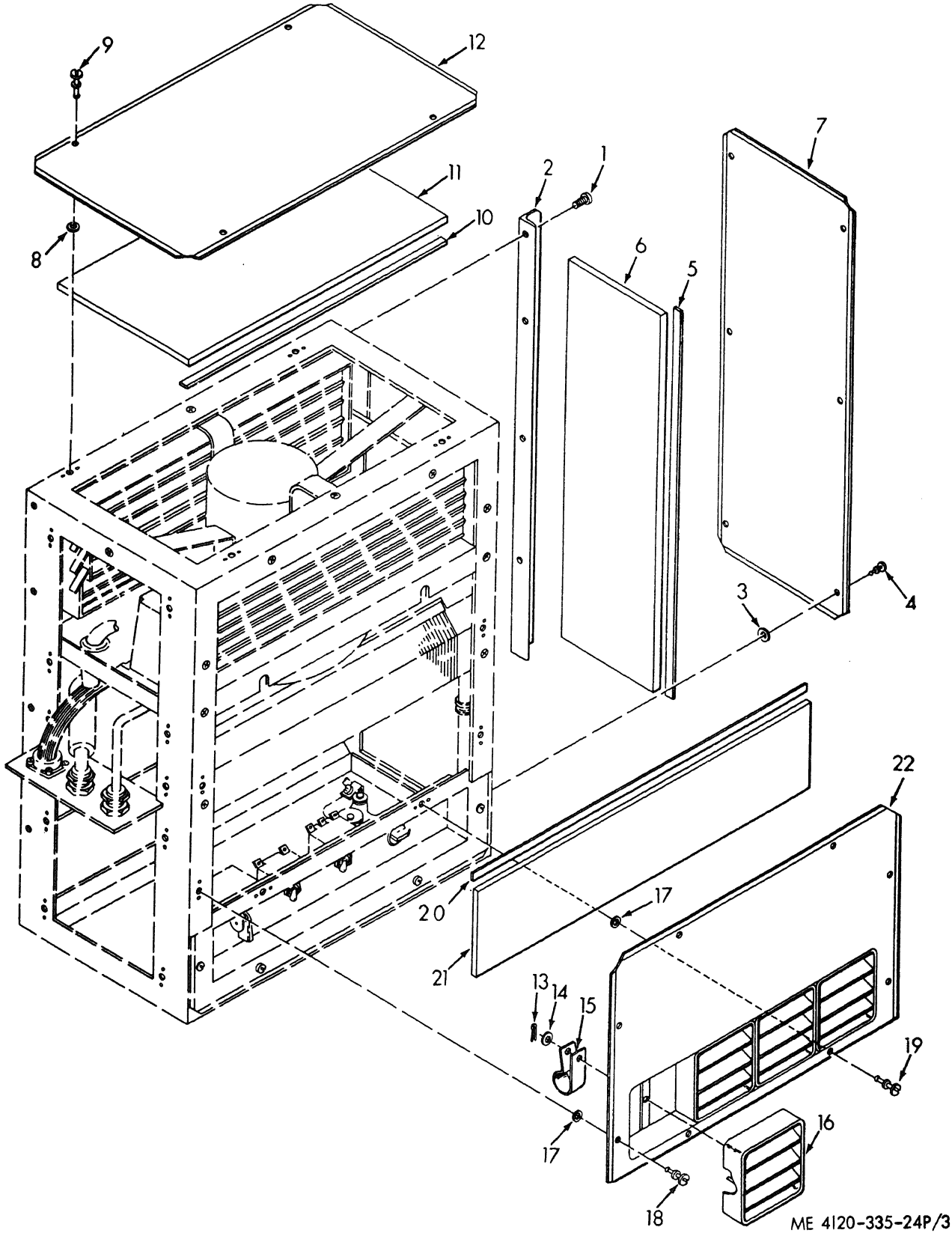

Figure 3. Mounting Bracket, Top Left and Front Panels

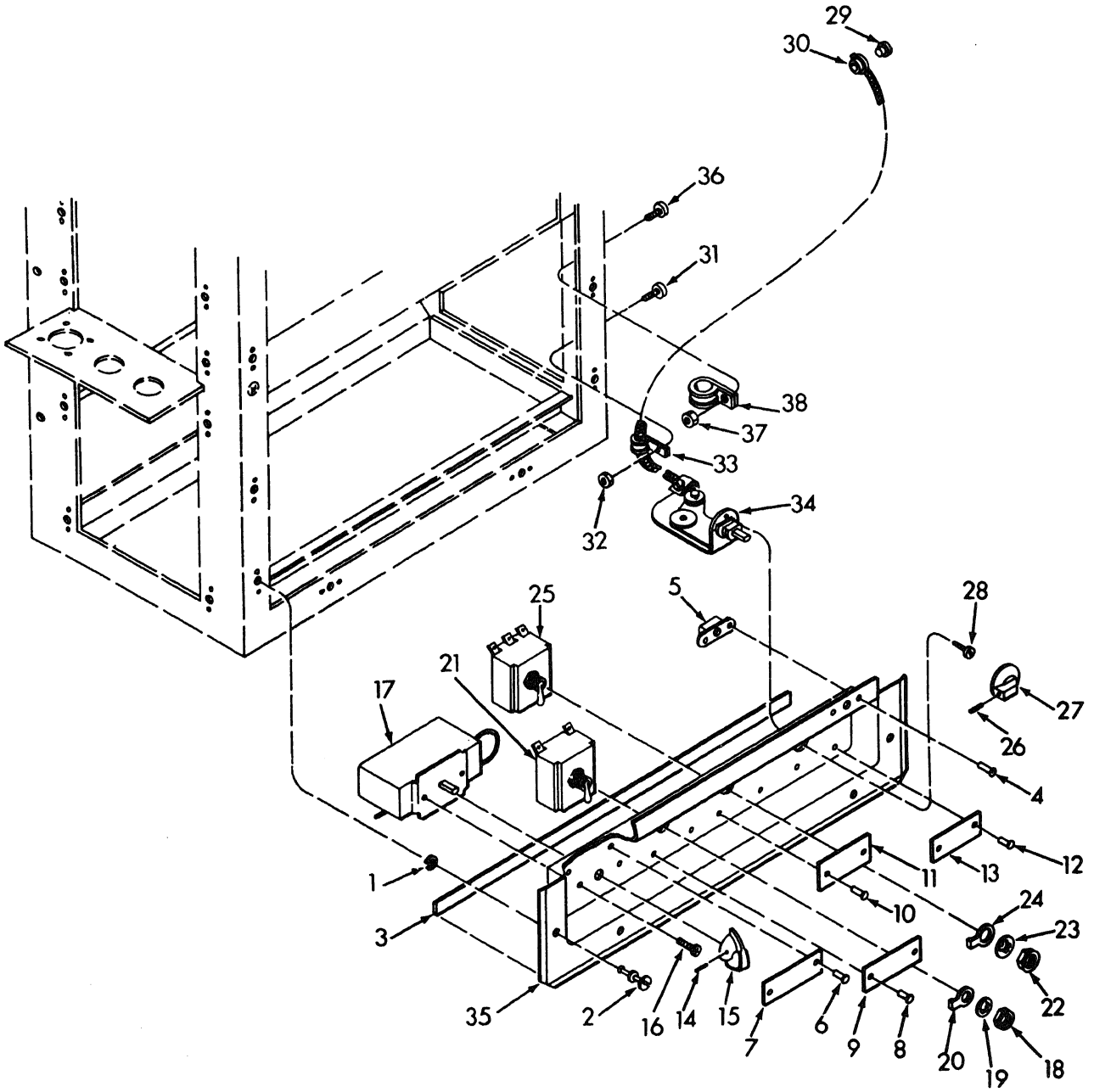

ME 4120-335-24P/4

Figure 4. Control Box and Related Parts

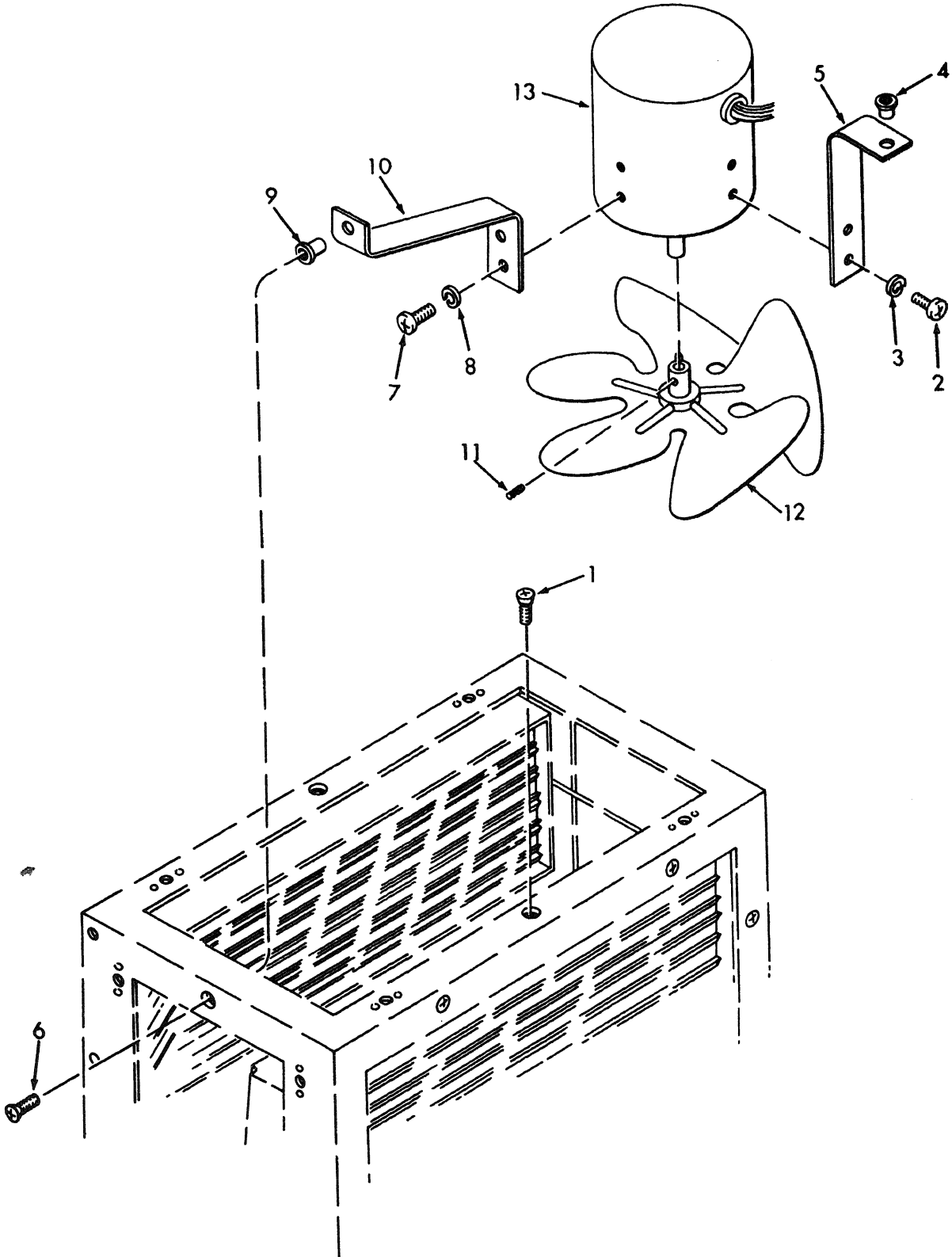

Figure 5. Evaporator Fan, Fan Motor and Mounting Brackets

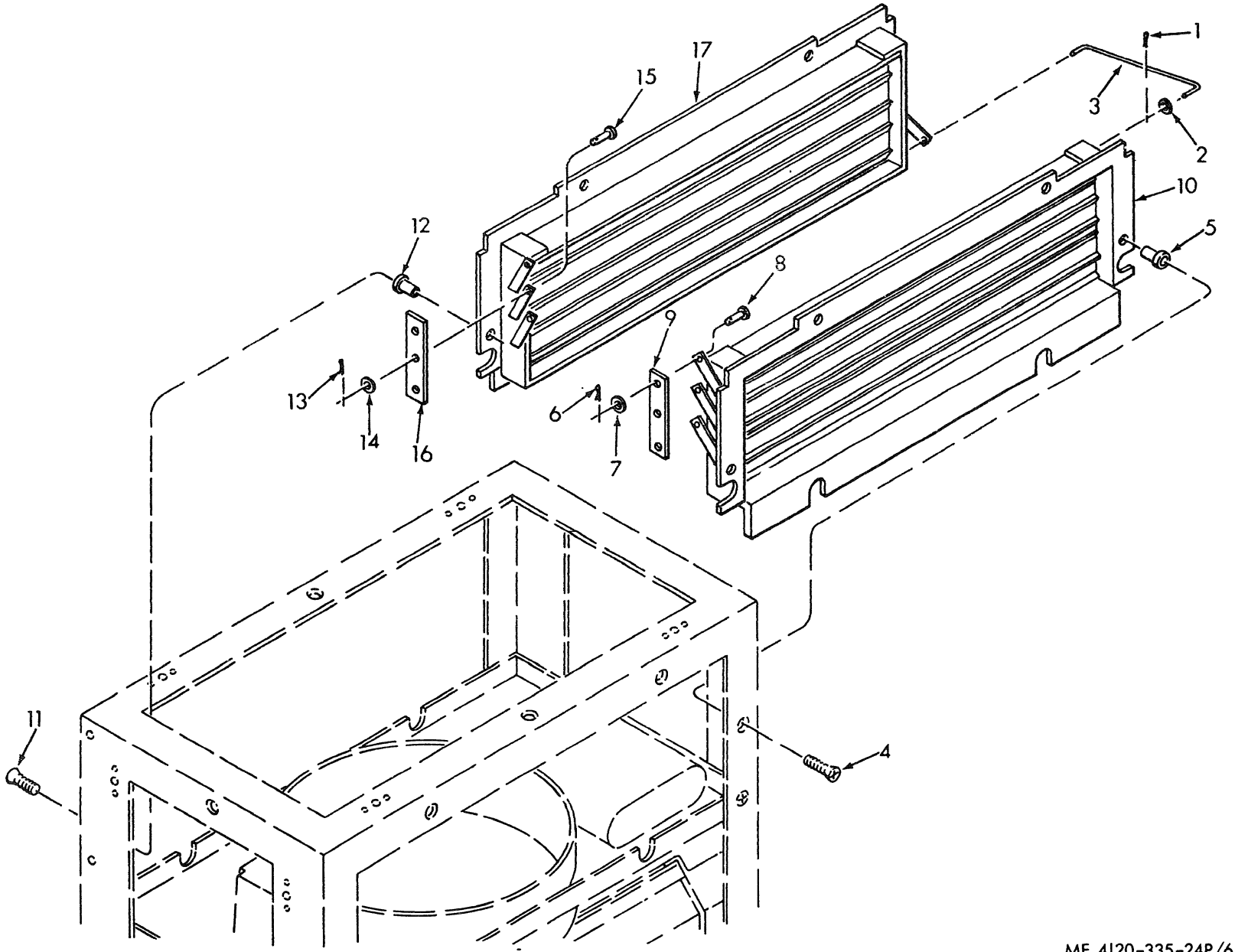

Figure 6. Front and Rear Dampers, Evaporator Section

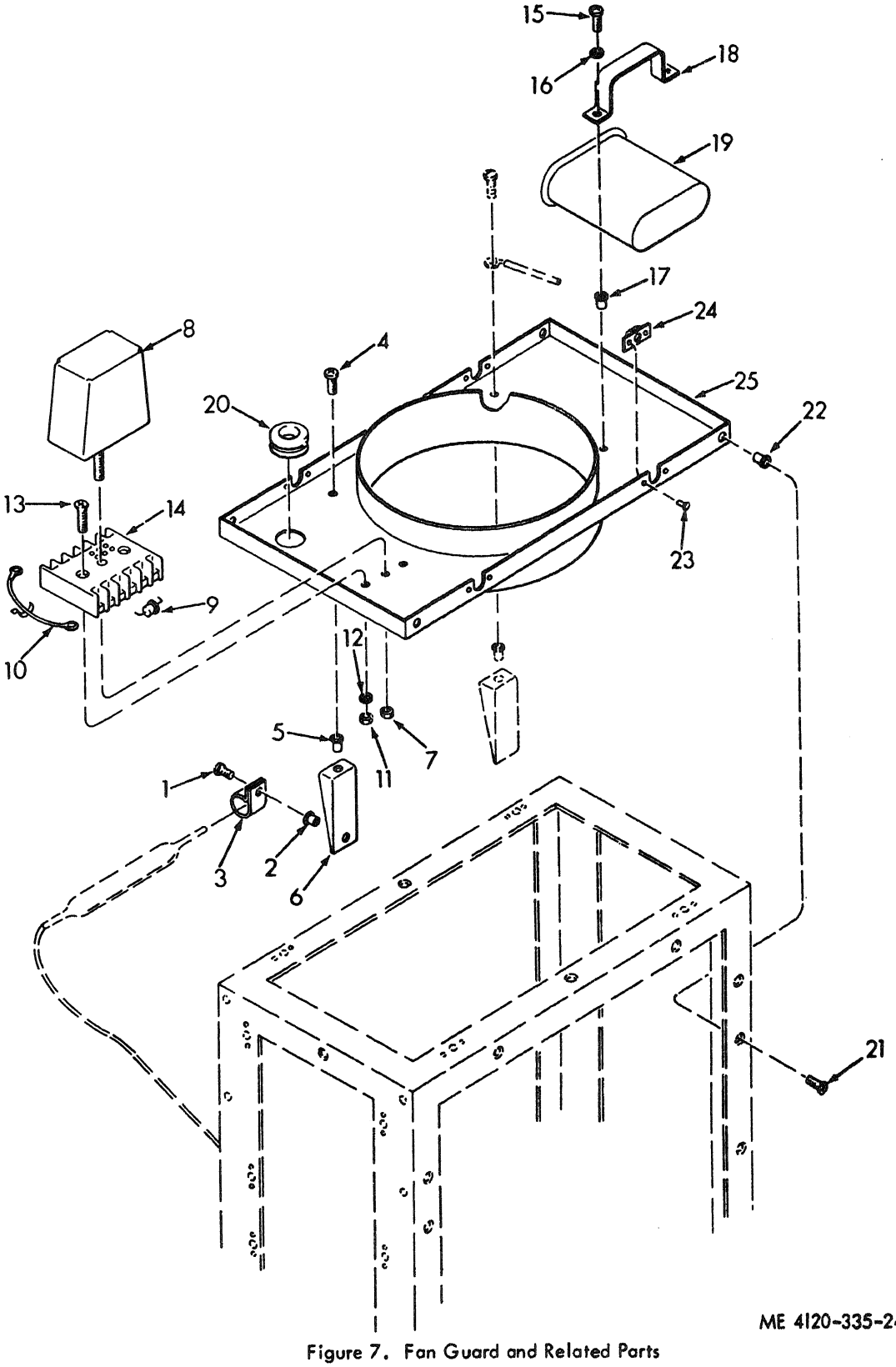

ME 4120-335-24P/7

Figure 7. Fan Guard and Related Parts

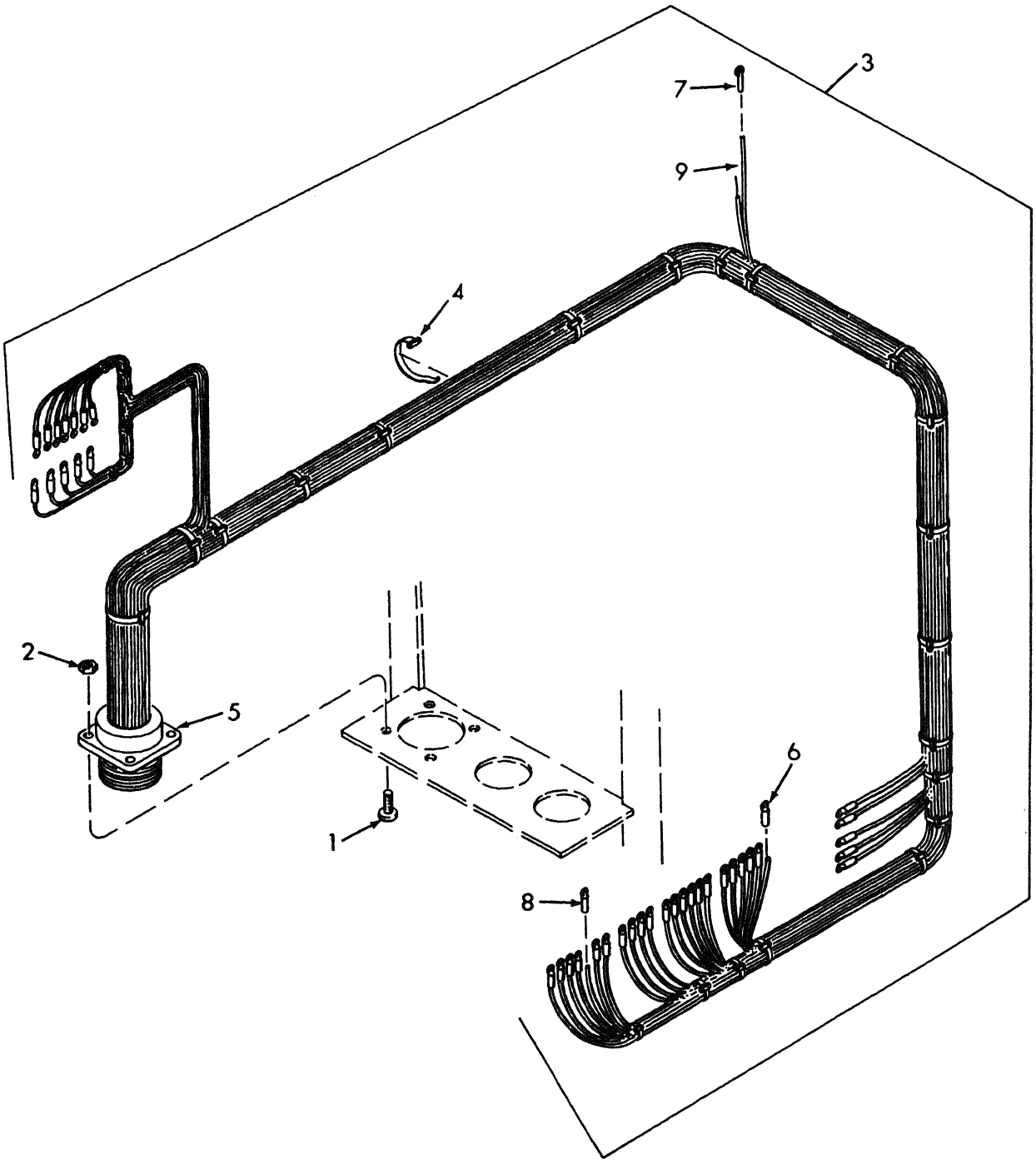

ME 4120-335-24P/8

Figure 8. Wiring Harness, Evaporator Section

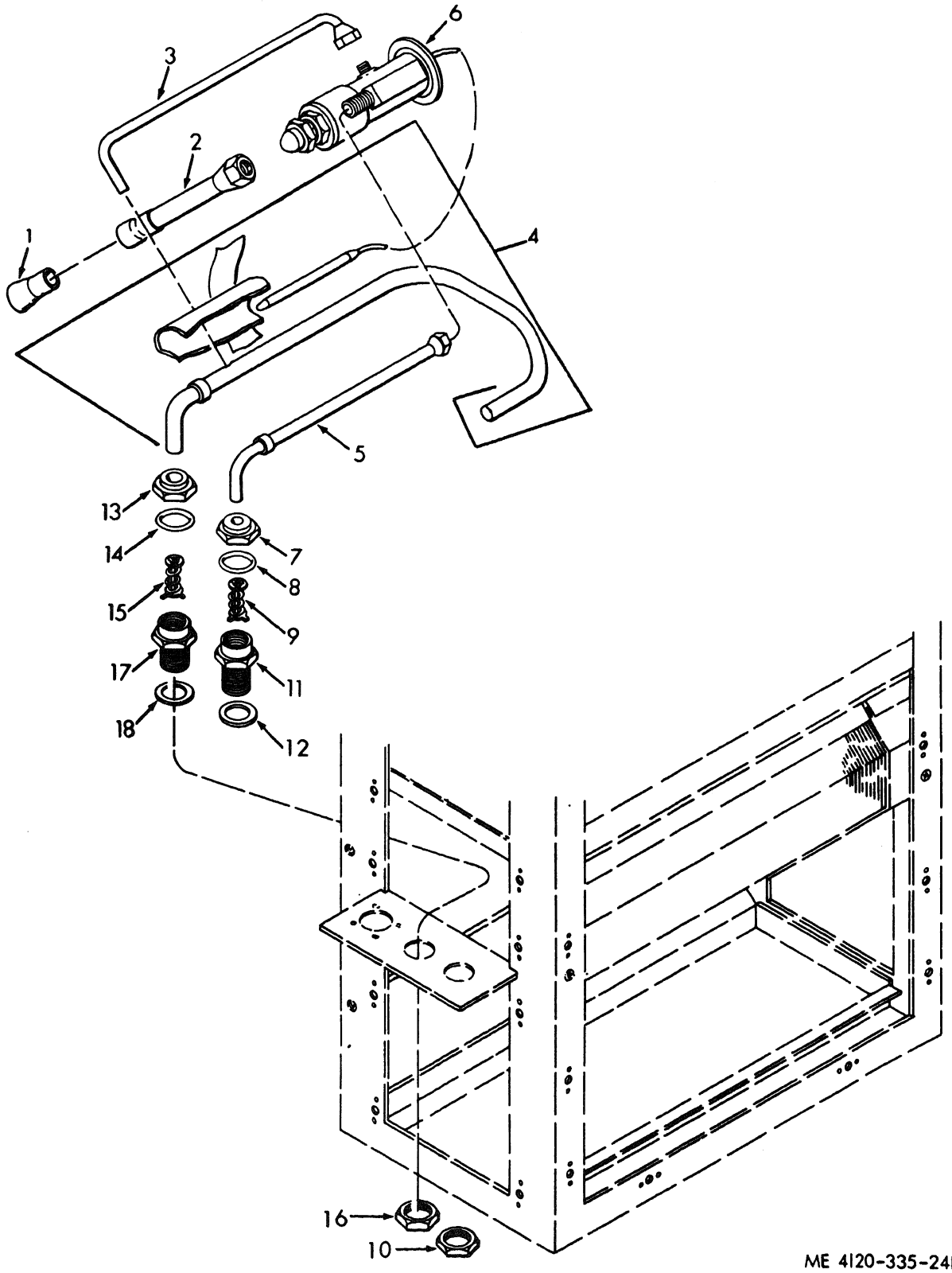

ME 4120-335-24P/9

Figure 9. Expansion Valve and Tubing

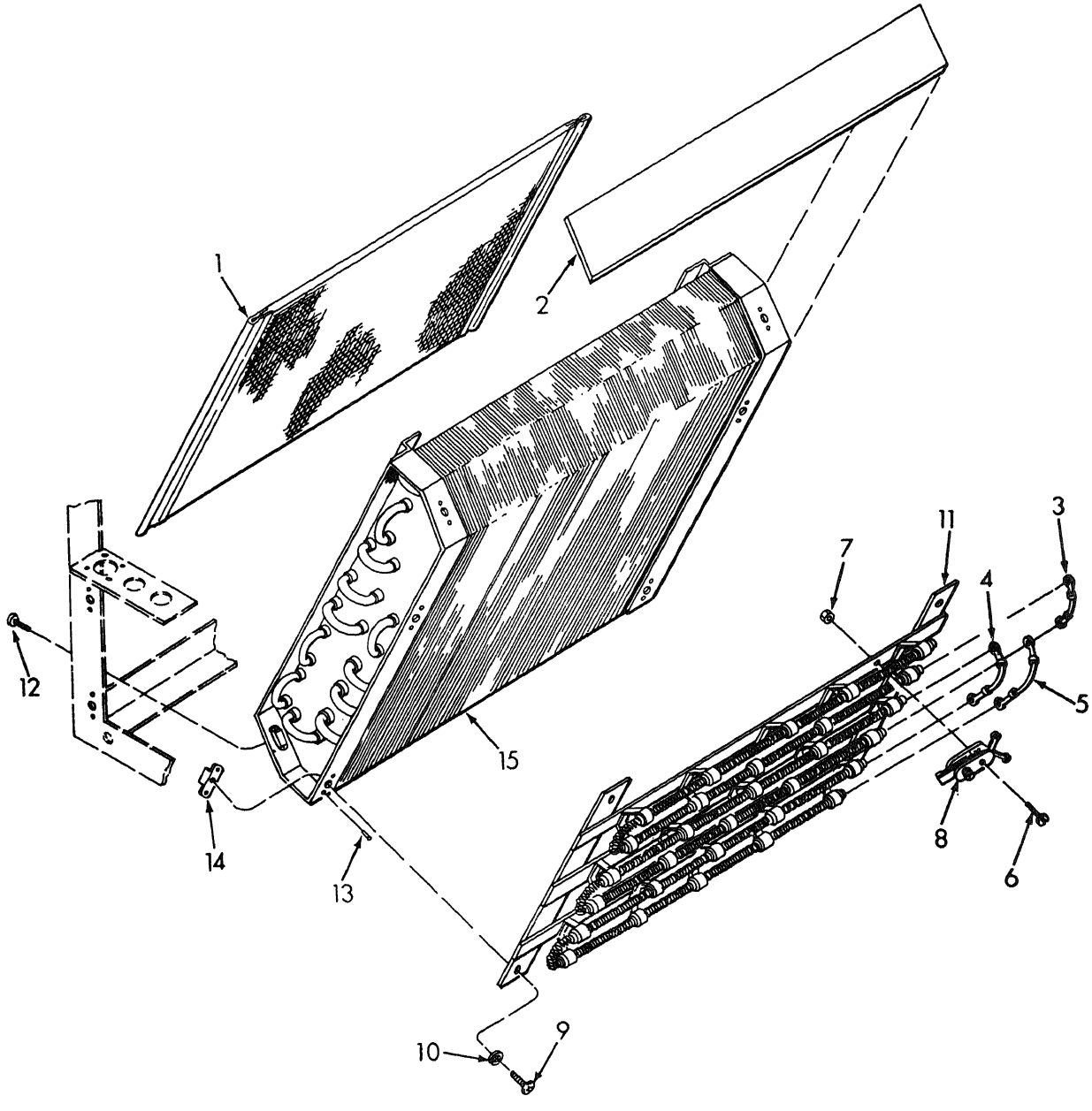

ME 4120-335-24P/10

Figure 10. Evaporator and Heater Coils and Air Filter

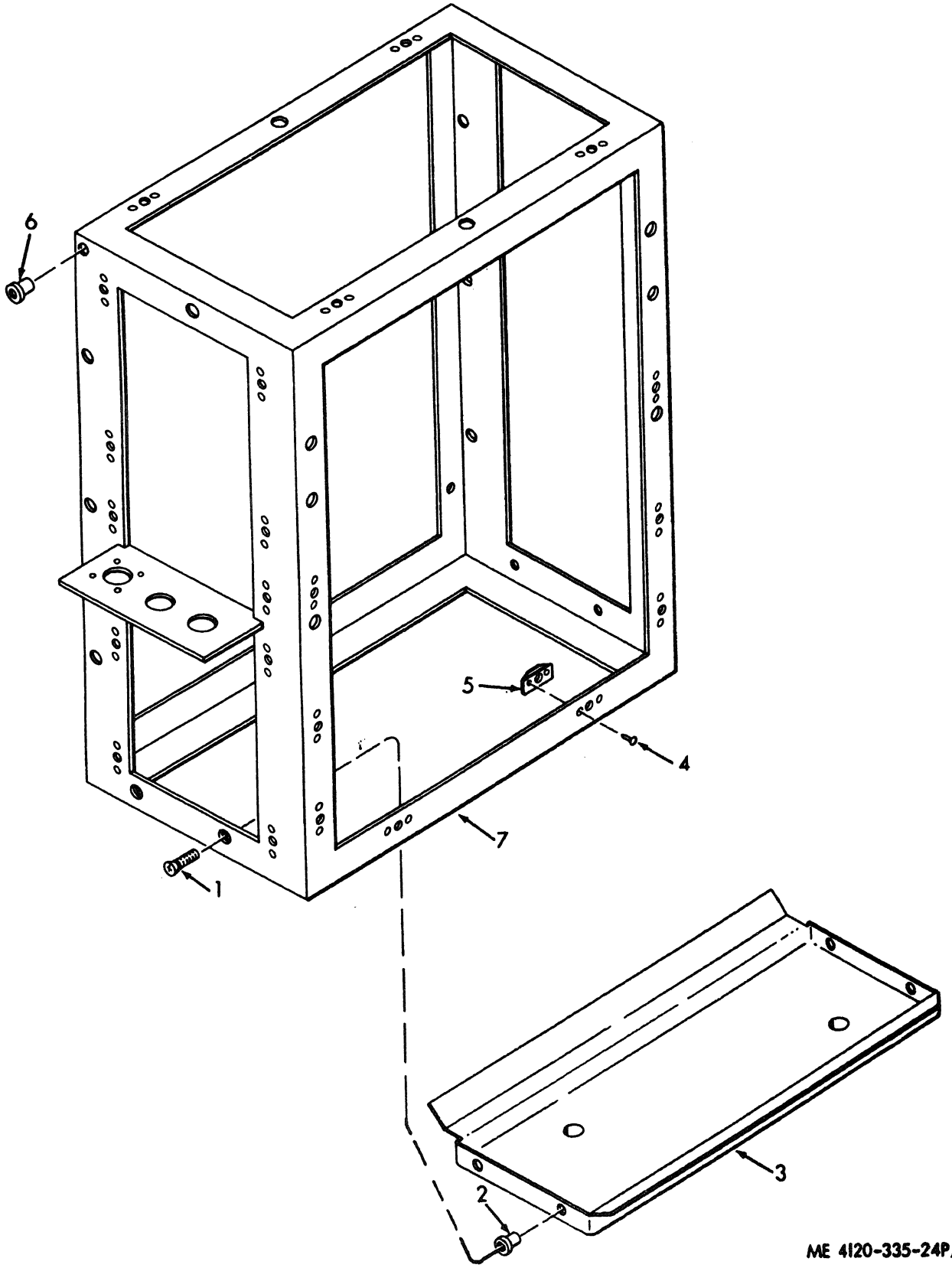

ME 4120-335-24P/11

Figure 11. Condensate Pan and Frame, Evaporator Section

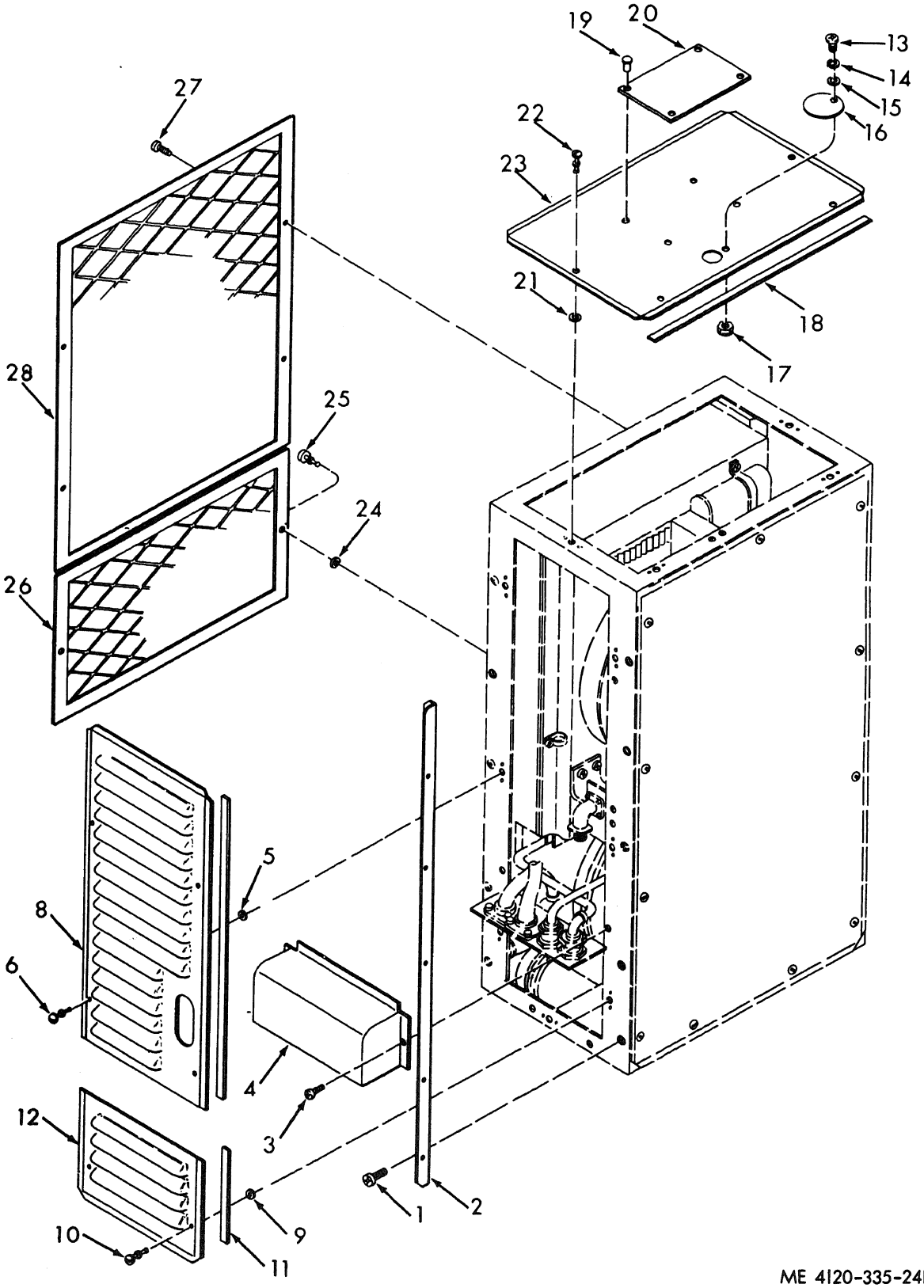

ME 4120-335-24P/12

 Figure 12. Mounting Bracket, Connector Cover, Front, Top and Left Side Panels, Condenser Section

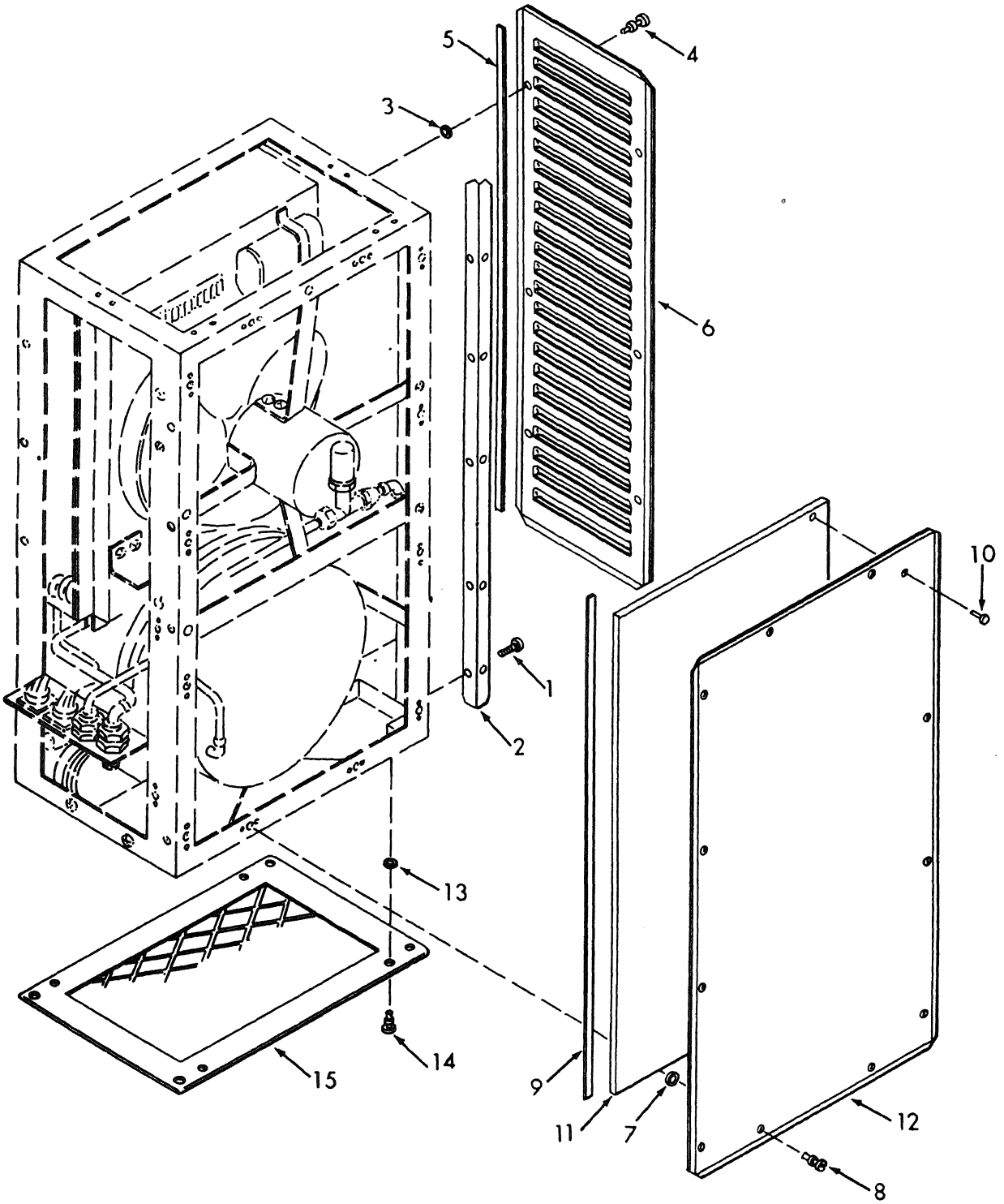

ME 4120-335-24P/13

Figure 13. Mounting Bracket, Left Rear and Bottom Panels, Condenser Section

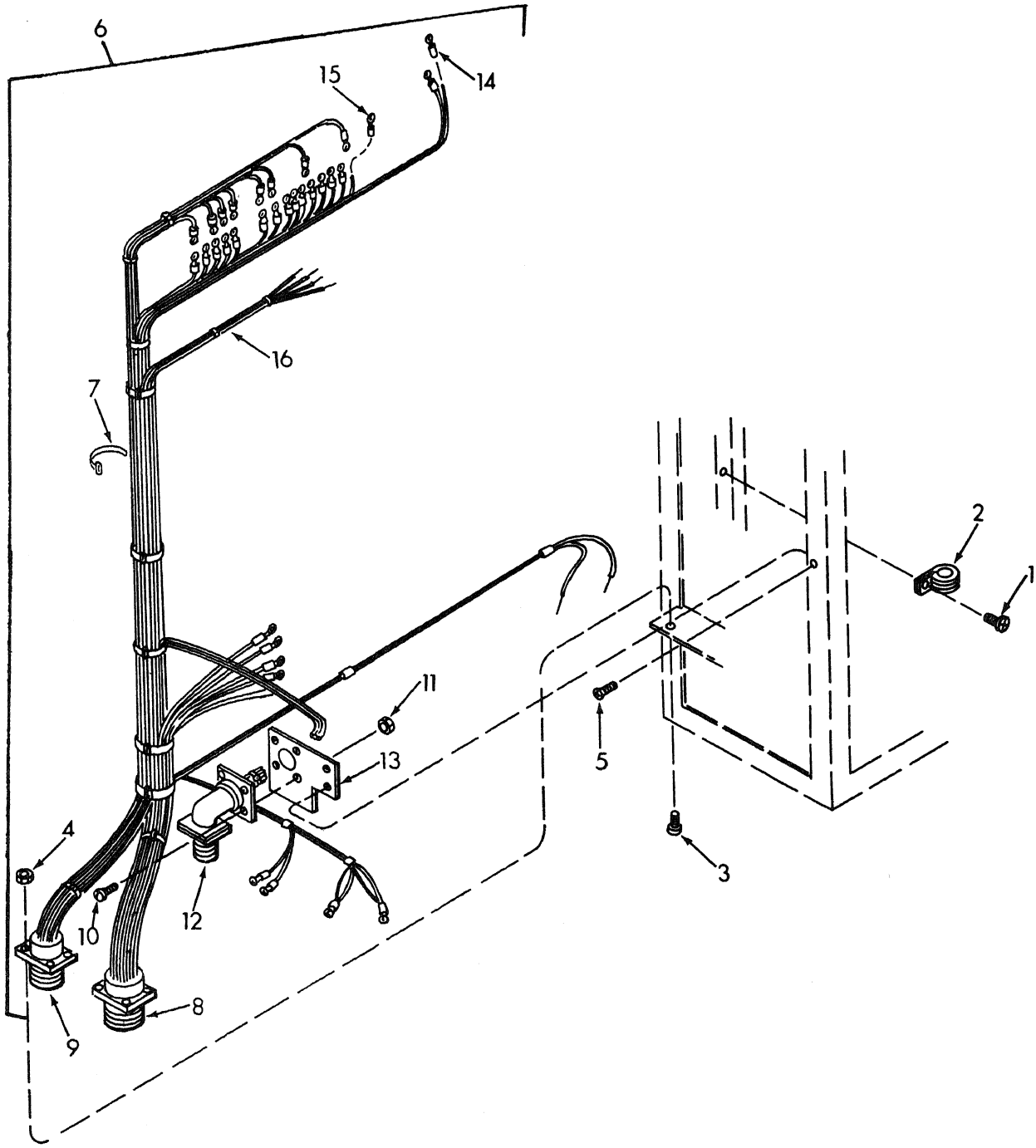

ME 4120-335-24P/14

Figure 14. Wiring Harness, Condenser Section

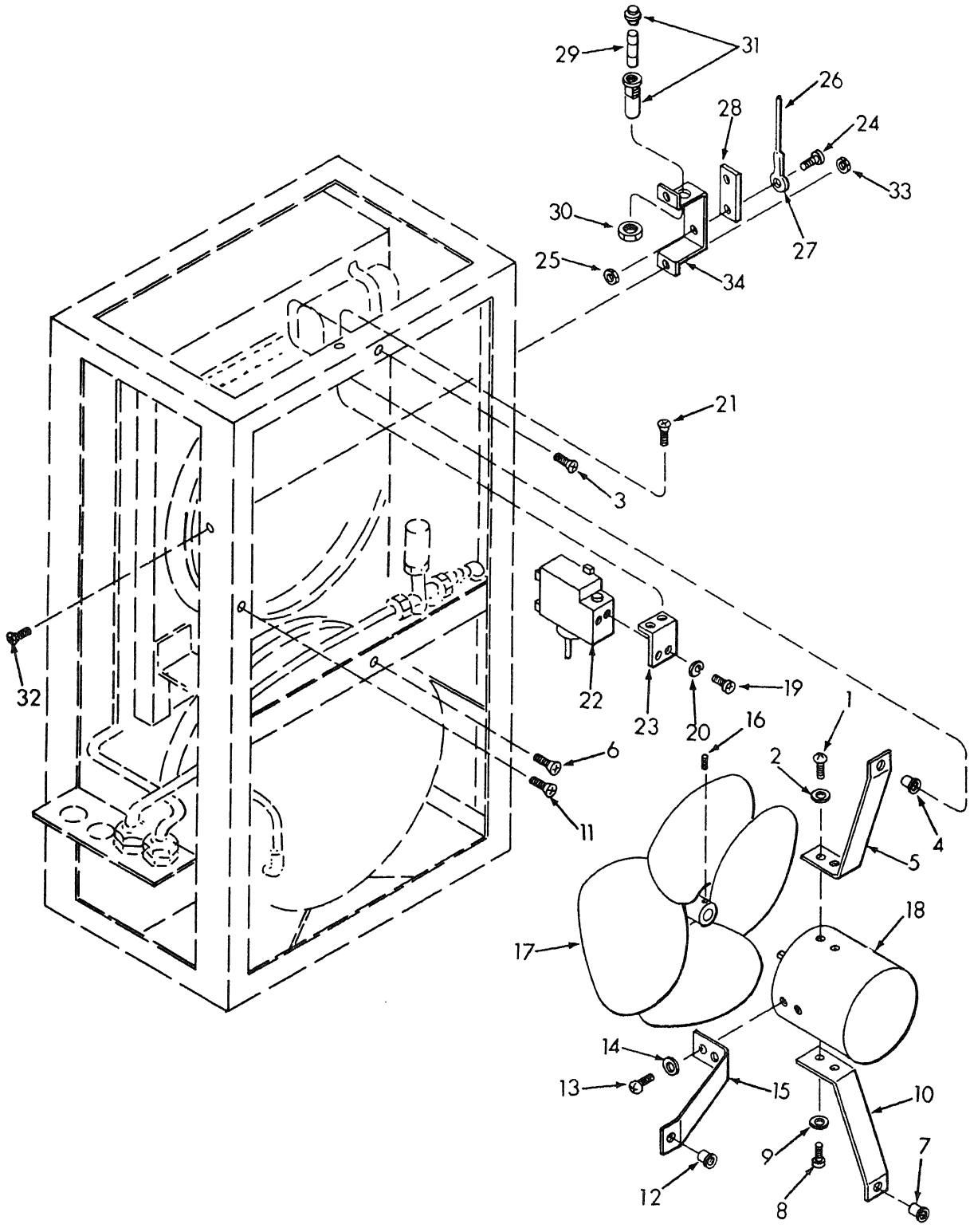

ME 4120-335-24P/15

Figure 15. Condenser Fan, Fan Motor, Pressure Switch and Rectifier

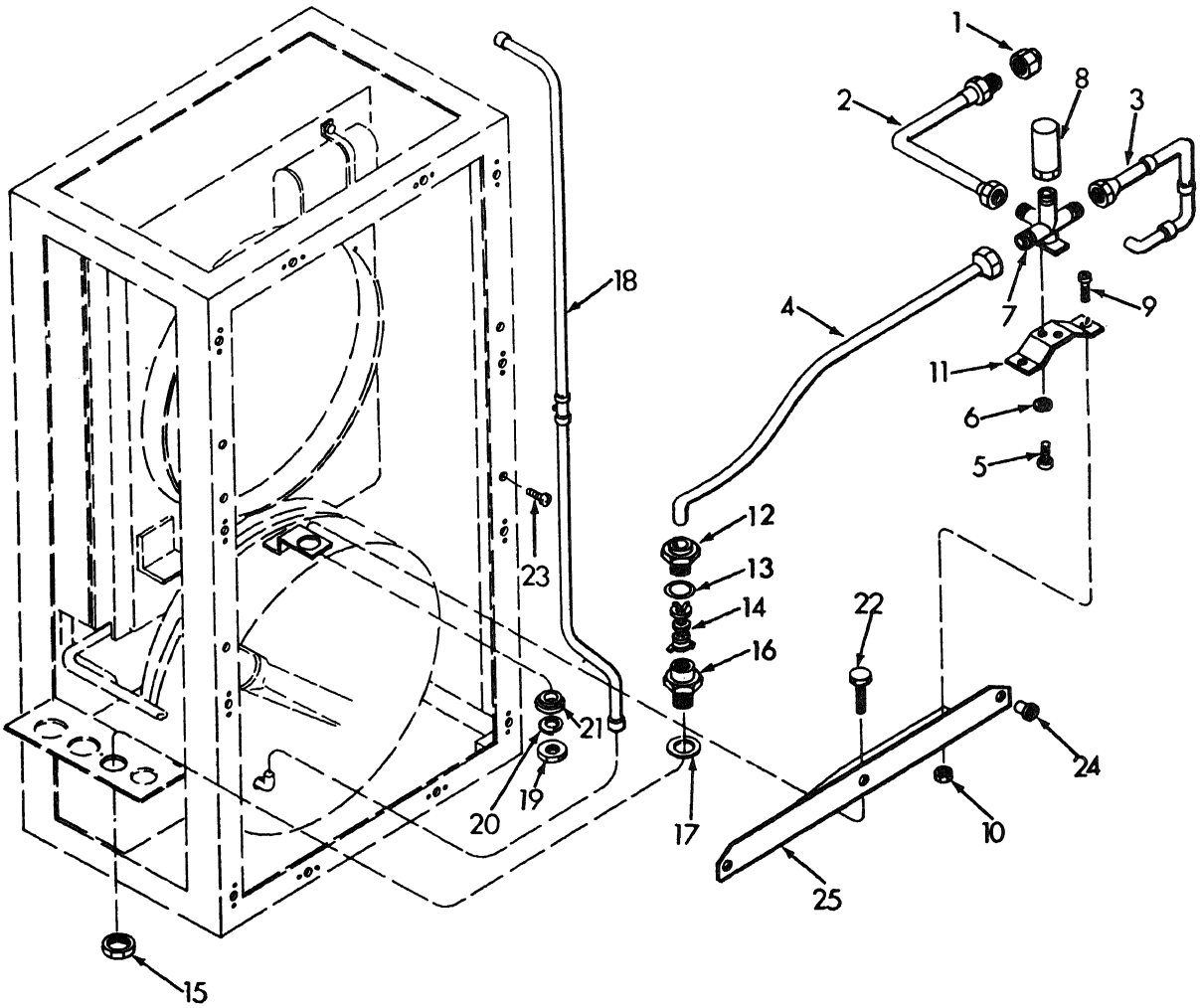

ME 4120-335-24P/16

Figure 16. Shut-Off Valve and Piping

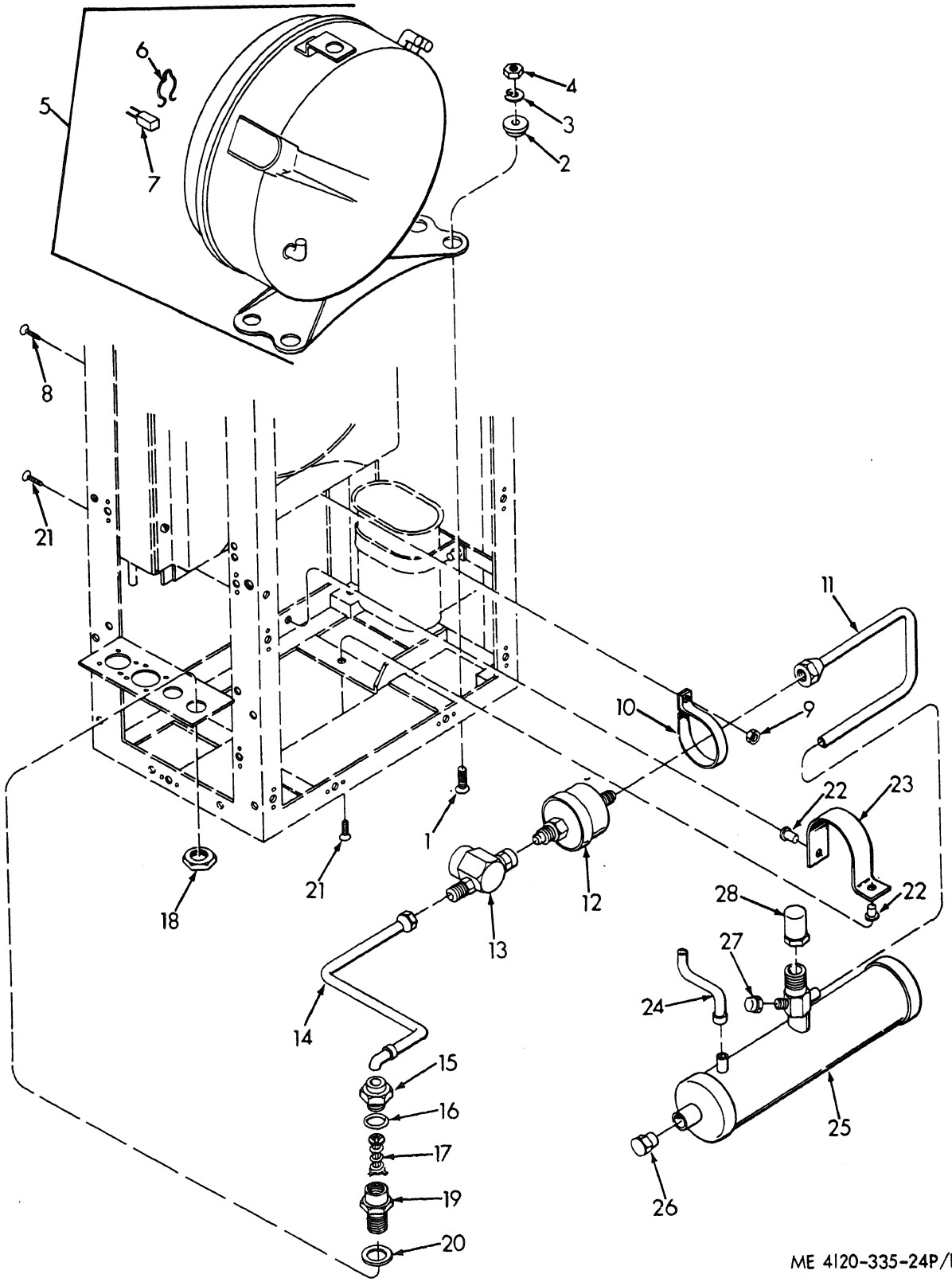

ME 4120-335-24P/17

Figure 17. Compressor, Sight Glass, Filter-Drier, Receiver and Piping

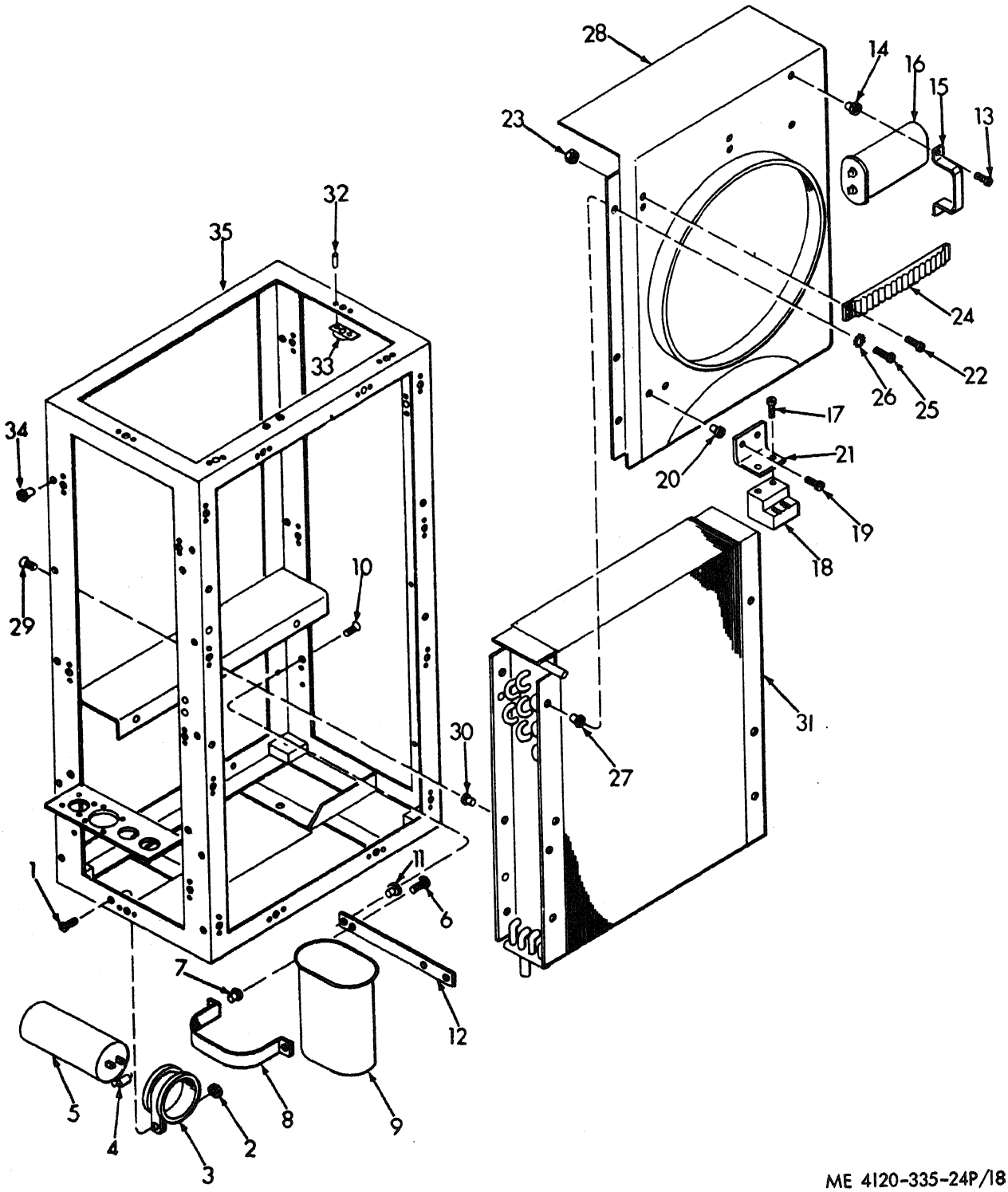

ME 4120-335-24P/18

Figure 18. Capacitors, Fan Shroud, Condenser Coil and Frame

SECTION VII - INDEX-FEDERAL STOCK NUMBER AND REFERENCE NUMBER CROSS-REFERENCE TO FIGURE AND ITEM NUMBER

STOCK NUMBER	FIGURE NO.	ITEM NO.
4120-963-0221	2	6
	2	13
	2	18
	2	23
	3	4
	3	9
	3	18
	4	2
	12	6
	12	10
	12	22
	12	25
	13	4
	13	8
	13	14
4130-070-8843	17	5
4130-733-7842	10	8
4130-840-8594	17	6
4130-840-8619	8	3
4130-842-5336	1	9
4130-842-5339	1	1
4130-895-3068	18	31
4130-895-3069	1	5
4130-964-9157	9	1
4130-987-5587	10	1
4730-613-9862	1	3
	1	7
4730-613-9863	9	11
	9	17
	16	16
	17	19
4730-613-9864	1	11
	1	12
	1	13
	1	14
4820-774-6575	9	9
	9	15
	16	14
	17	17
4820-995-9014	9	6

STOCK NUMBER	FIGURE NO.	ITEM NO.
5310-845-5472	2	5
	2	12
	2	17
	2	22
	3	3
	3	8
	3	17
	4	1
	12	5
	12	9
	12	21
	12	24
	13	3
	13	7
	13	13
5325-788-5635	4	5
	7	24
	11	5
	18	33
5330-727-1286	1	2
	1	6
	9	8
	9	14
	16	13
	17	16
5330-805-2408	9	12
	9	18
	16	17
	17	20
5340-353-5518	17	26
5355-995-6357	4	27
5910-933-0597	18	5
5910-934-2783	18	9
5910-936-1282	7	19
	18	16
5920-280-8344	15	29
5930-660-3953	4	21
5930-817-7335	4	17
5935-836-0173	8	5
5945-835-9079	7	8
5961-978-7660	7	9
6105-932-2430	17	7
6105-935-0376	15	18

SECTION VII - INDEX-FEDERAL STOCK NUMBER AND REFERENCE NUMBER CROSS-REFERENCE TO FIGURE AND ITEM NUMBER

REFERENCE NO.	MFG. CODE	FIG. NO.	ITEM NO.
AN960-6	88044	12	15
A-13612	41947	16	7
A14017	41947	17	26
A15404-8-8S-60	00624	1	5
A15405-8-6S-60	00624	1	1
A22-110F	44214	10	8
A23759-1	60380	5	12
A4544	41947	17	27
B39040-101	06534	4	13
B39041-101	06534	4	9
B39042-101	06534	4	11
B39043-101	06534	4	7
B391-1	92310	15	28
CFE-1/2-G-BP/20	78462	9	6
C12-5010	49742	4	17
C39034-1	06534	10	1
C39037-1	06534	18	31
DE3-10-11-3/4-12	00249	10	15
FHL17G	71400	15	31
FO250V1/2A	71400	15	29
H-713C	94629	10	11
MD-015-3	78897	17	12
MIL-I-16562	81349	2	8
	81349	2	15
	81349	2	20
	81349	2	25
	81349	3	6
	81349	3	11
	81349	3	21
	81349	10	2
MIL-P-514	81349	2	10
	81349	12	20
MIL-R-6130	81349	2	7
	81349	2	14
	81349	2	19
	81349	2	24
	81349	3	5
	81349	3	10
	81349	3	20
	81349	4	3
	81349	12	7
	81349	12	11
	81349	12	18
	81349	13	5
	81349	13	9
MIL-U-6-VAC-610	64731	17	5
MRA4953	80602	17	7
MS18034-4-2	96906	8	4
	96906	14	7
MS20392-1C7	96906	6	8
	96906	6	15
MS20426AD3-5	96906	10	13
	96906	11	4
	96906	18	32
MS20426A3-3	96906	7	23
MS20426A3-5	96906	4	4
MS20470AD4-4	96906	13	10
MS20470AD4-5	96906	1	15
	96906	1	17
	96906	1	19
MS20470A2-3	96906	4	6
	96906	4	8
	96906	4	10
	96906	4	12
MS20470A4-4	96906	12	19
MS21044-N04	96906	7	7
	96906	8	2
	96906	14	4
	96906	14	11
MS21044-N06	96906	10	7
MS21044-N08	96906	16	10
	96906	18	2
MS21044-N3	96906	4	32
	96906	4	37
	96906	17	9
MS21045-06	96906	1	22
	96906	15	25
	96906	15	33
	96906	18	23
MS21104D4	96906	4	33
MS21919DG28	96906	18	3
MS21919DG8	96906	4	38
	96906	14	2
MS24525-21	96906	4	25
MS24525-22	96906	4	21
MS24665-69	96906	3	13
	96906	6	1
	96906	6	6
	96906	6	13
MS24679-108	96906	16	1
MS25036-106	96906	14	15
MS25036-53	96906	8	8
	96906	15	27
MS25036-6	96906	8	6
MS25036-8	96906	8	7
MS25043-12C	96906	1	23
MS25043-18	96906	1	18
MS25043-22	96906	1	16
	96906	1	20
MS25082-10	96906	15	30
MS25169P1B	96906	4	27
MS25190-A-16	96906	1	25
	96906	8	9
	96906	14	16
	96906	15	26
MS25281-F6	96906	7	3
MS25130-14K	96906	7	1
	96906	7	17
	96906	17	22
	96906	18	7
	96906	18	14
	96906	18	20
MS27130-20K	96906	6	5
	96906	6	12
	96906	7	5
	96906	7	22
	96906	11	2
	96906	11	6
	96906	18	34
MS27130-22K	96906	5	4
	96906	5	9
	96906	15	7
	96906	15	12
	96906	18	11
	96906	18	27
	96906	18	30
MS27130-22	96906	16	24
MS27130-27K	96906	15	4
MS27183-6	96906	3	14
	96906	6	2
	96906	6	7
	96906	6	14

SECTION VII - INDEX-FEDERAL STOCK NUMBER AND REFERENCE NUMBER CROSS-REFERENCE TO FIGURE AND ITEM NUMBER

REFERENCE NO.	MFG. CODE	FIG. NO.	ITEM NO.
MS27183-7	96906	16	6
MS3102R-22-19P	96906	8	5
MS3102R-22-19S	96906	14	8
MS3106A-145-7P	96906	1	24
MS3106R-18-4S	96906	1	10
MS3518-2	96906	5	11
MS35190-236	96906	15	32
MS35190-254	96906	15	21
	96906	17	21
	96906	18	1
MS35190-305	96906	17	1
MS35191-273	96906	4	31
	96906	4	36
	96906	5	1
	96906	5	6
	96906	6	4
	96906	6	11
	96906	7	21
	96906	10	12
	96906	11	1
	96906	14	5
	96906	15	3
	96906	15	6
	96906	15	11
	96906	16	23
	96906	18	10
	96906	18	29
MS35206-217	96906	8	1
	96906	14	10
MS35206-224	96906	5	28
MS35206-227	96906	1	21
MS35206-230	96906	12	13
	96906	15	19
	96906	15	24
	96906	18	22
MS35206-243	96906	5	2
	96906	5	7
	96906	15	1
	96906	15	8
	96906	15	13
	96906	16	9
	96906	18	6
	96906	18	13
	96906	18	17
MS35206-245	96906	7	15
	96906	18	19
MS35206-249	96906	7	13
MS35207-204	96906	12	1
MS35207-217	96906	14	3
MS35207-244	96906	16	5
MS35207-264	96906	2	1
	96906	2	3
	96906	3	1
	96906	7	1
	96906	7	4
	96906	10	9
	96906	12	3
	96906	12	27
	96906	13	1
	96906	14	1
	96906	17	8
	96906	18	25

REFERENCE NO.	MFG. CODE	FIG. NO.	ITEM NO.
MS35223-28	96906	4	26
MS35225-41	96906	4	29
MS35335-18	96906	18	26
MS35338-41	96906	12	14
	96906	15	20
MS35338-42	96906	5	3
	96906	5	8
	96906	7	12
	96906	7	16
	96906	15	2
	96906	15	9
	96906	15	14
MS35338-43	96906	10	10
MS35338-45	96906	16	20
	96906	17	3
MS35489-14	96906	7	20
MS35649-82	96906	7	11
MS51967-5	96906	16	19
	96906	17	4
MS90725-32	96906	16	22
NAS1031-P3	80205	10	14
P-1020-4	60380	15	17
P-580	78857	17	25
RC42GF153J	81349	18	4
1N1695	03538	7	9
13211E4607	06534	9	5
13211E4608-2	06534	1	9
13211E4609	06534	18	35
13211E4611	06534	11	3
13211E4617	06534	4	35
13211E4618	06534	3	22
13211E4624	06534	2	11
13211E4625	06534	3	7
13211E4626	06534	2	21
13211E4626	06534	2	16
13211E4628	06534	3	12
13211E4629	06534	2	26
13211E4631	06534	3	16
13211E4632	06534	2	4
13211E4640	06534	9	2
13211E4646	06534	3	15
13211E4650	06534	7	6
13211E4651	06534	9	3
13211E4674	06534	17	23
13211E4677	06534	15	34
13211E4681	06534	12	4
13211E4689	06534	12	26
13211E4692	06534	16	25
13211E4699	06534	16	18
13211E4700	06534	17	24
13211E4701	06534	17	14
13211E4702	06534	17	11
13211E4704	06534	16	3
13211E4712	06534	12	8
13211E4713	06534	13	15
13211E4714	06534	12	12
13211E4715	06534	13	6
13211E4716	06534	7	25
13211E4717	06534	5	5
13211E4718	06534	5	10
13211E4720	06534	9	4
13211E4722	06534	6	17
13211E4723	06534	6	3
13211E4726	06534	6	10
13211E4727	06534	2	2

SECTION VII - INDEX-FEDERAL STOCK NUMBER AND REFERENCE NUMBER CROSS-REFERENCE TO FIGURE AND ITEM NUMBER

REFERENCE NO.	MFG. CODE	FIG. NO.	ITEM NO.
13211E4728	06534	15	5
13211E4729	06534	15	15
13211E4730	06534	15	10
13211E4731	06534	13	2
13211E4732	06534	18	28
13211E4733	06534	18	21
13211E4739	06534	7	18
	06534	18	15
13211E4742	06534	14	12
13211E4743	06534	6	9
	06534	6	16
13211E4745	06534	13	12
13211E4746	06534	13	11
13211E4747	06534	8	3
13211E4748	06534	14	13
13211E4752	06534	16	2
13211E4752-3	06534	10	4
13211E4753	06534	12	23
13211E4754	06534	3	2
13211E4755	06534	12	2
13211E4756	06534	11	7
13211E4757-1	06534	10	5
13211E4757-2	06534	10	3
13211E4757-4	06534	7	10
13211E4758	06534	18	8
13211E4759	06534	18	12
13211E4763	06534	4	20
	06534	16	4
13211E4764	06534	16	21
	06534	17	2
13211E4767	06534	12	28
13211E9786	06534	12	16
13216E5127	06534	16	11
13216E9787	06534	15	23
13216E9796	06534	17	10
13217E1989	06534	14	6
15-404-6	15605	4	22
	15605	4	18
15231-8	60380	15	16
15515	49742	4	15
1620-2-3/16-1N	78462	9	1
16-886	15605	4	19
	15605	4	23
202208-6-8	00624	9	7
	00624	17	15
202208-8-8	00624	9	13
	00624	16	12
210AP40AN-4401	92578	15	22
2198BX134	78290	7	8
22008-8	00624	9	12
	00624	9	18
	00624	16	17
	00624	17	20
22546-17	00624	1	2
	00624	1	6
	00624	9	8
	00624	9	14
	00624	16	13
	00624	17	16
270-032-585	70436	4	34
27390	78290	7	14
29-761	15605	4	20
	15605	4	24
37TB13	75382	18	24
3715-6	64731	5	13
	64731	15	18
40577	59431	17	6
41532	00779	14	14
43017-3	49742	4	14
43644-8	49742	4	16
49F6443	01002	7	19
	01002	18	16
49F6474	01002	18	9
5400-S19-8	00624	1	4
	00624	1	8
	00624	9	17
5400-S2-8	00624	9	11
	00624	16	16
	00624	17	19
5400-S20-8	00624	9	9
	00624	9	15
	00624	16	14
	00624	17	17
5400-S5-8	00624	1	3
	00624	1	7
5400-53-8	00624	9	10
	00624	9	16
	00624	16	15
	00624	17	18
5400-S6-8	00624	1	11
	00624	1	12
	00624	1	13
	00624	1	14
6409-30-192	82647	18	18
74-11-106-13	24248	12	17
7618-46	41947	16	8
	41947	17	28
82-11-101-17	94222	3	3
82-11-280-16	94222	2	6
	94222	2	12
	94222	2	13
	94222	2	18
	94222	2	23
	94222	3	4
	94222	3	9
	94222	3	18
	94222	4	2
	94222	12	6
	94222	12	10
	94222	12	22
	94222	12	25
	94222	13	4
	94222	13	8
	94222	13	14
82-11-300-16	94222	3	19
82-32-101-17	94222	2	5
	94222	2	17
	94222	2	22
	94222	3	8
	94222	3	17
	94222	4	1
	94222	12	5
	94222	12	9
	94222	12	21
	94222	12	24
	94222	13	3
	94222	13	7
	94222	13	13
82-35-302-15	94222	4	5
	94222	7	24
	94222	11	5
	94222	18	33
85508-3	37942	18	5

SECTION VII - INDEX-FEDERAL STOCK NUMBER AND REFERENCE NUMBER CROSS-REFERENCE TO FIGURE AND ITEM NUMBER

ITEMS NOT ILLUSTRATED

STOCK NUMBER	GROUP NO.	PG.NO.
4130-733-7845	12	37
4710-203-3172	06	28
4730-189-2737	06	28
	12	37
4730-189-2739	06	28
4730-189-2741	06	28
	12	35
5935-817-3171	01	19
5935-826-2174	01	19

REFERENCE NO.	MFG.CODE	GROUP NO.	PG.NO.
ASTM-B-280	46783	06	27
	46783	06	28
	46783	12	35
	46783	12	36
	46783	12	37
	46783	12	38
MIL-I-631	81349	01	19
MIL-M-2210	81349	04	26
MIL-T-22085	81349	06	28
MIL-W-5086/1	81349	01	19
MS25036-53	96906	04	26
	96906	07	29
MS25190-A-16	96906	04	26
	96906	07	29
MS35917-4	96906	12	35
MS35919-2-4	96906	12	35
MS35923-5	96906	06	28
MS35928-3	96906	06	28
	96906	12	37
MS35928-4	96906	06	28
W-40324	41947	12	36
204	03938	06	28

By Order of the Secretary of the Army:

BRUCE PALMER, JR.,
General, United States Army,
Acting Chief of Staff.

Official:

VERNE L. BOWERS,
Major General, United States Army,
The Adjutant General.

Distribution:
To be distributed in accordance with DA Form 12-25C, (qty rqr block no. 530) Organizational maintenance requirements for Air Conditioners, Environmental Equipment, 6000BTU.

☆ U. S. GOVERNMENT PRINTING OFFICE : 1989 O - 242-466 (3738)

TM 5-4120-335-24P AIR CONDITIONER: WALL OR BASE MOUNTED, 6,000 BTU/HR - 1972

PIN : 005798-000